SIEMENS

SIMATIC

TeleControl - RTU RTU3030C

Operating Instructions

Preface

Application and properties 1

LEDs, connectors, buttons, card slots 2

Connecting up, installation, commissioning 3

Configuration (WBM) 4

Programming 5

Diagnostics and maintenance 6

Technical data 7

Approvals A

Dimension drawings B

Accessories C

Documentation references D

09/2015

C79000-G8976-C382-01

Legal information

Warning notice system

This manual contains notices you have to observe in order to ensure your personal safety, as well as to prevent damage to property. The notices referring to your personal safety are highlighted in the manual by a safety alert symbol, notices referring only to property damage have no safety alert symbol. These notices shown below are graded according to the degree of danger.

⚠ DANGER
indicates that death or severe personal injury **will** result if proper precautions are not taken.

⚠ WARNING
indicates that death or severe personal injury **may** result if proper precautions are not taken.

⚠ CAUTION
indicates that minor personal injury can result if proper precautions are not taken.

NOTICE
indicates that property damage can result if proper precautions are not taken.

If more than one degree of danger is present, the warning notice representing the highest degree of danger will be used. A notice warning of injury to persons with a safety alert symbol may also include a warning relating to property damage.

Qualified Personnel

The product/system described in this documentation may be operated only by **personnel qualified** for the specific task in accordance with the relevant documentation, in particular its warning notices and safety instructions. Qualified personnel are those who, based on their training and experience, are capable of identifying risks and avoiding potential hazards when working with these products/systems.

Proper use of Siemens products

Note the following:

⚠ WARNING
Siemens products may only be used for the applications described in the catalog and in the relevant technical documentation. If products and components from other manufacturers are used, these must be recommended or approved by Siemens. Proper transport, storage, installation, assembly, commissioning, operation and maintenance are required to ensure that the products operate safely and without any problems. The permissible ambient conditions must be complied with. The information in the relevant documentation must be observed.

Trademarks

All names identified by ® are registered trademarks of Siemens AG. The remaining trademarks in this publication may be trademarks whose use by third parties for their own purposes could violate the rights of the owner.

Disclaimer of Liability

We have reviewed the contents of this publication to ensure consistency with the hardware and software described. Since variance cannot be precluded entirely, we cannot guarantee full consistency. However, the information in this publication is reviewed regularly and any necessary corrections are included in subsequent editions.

Siemens AG
Division Process Industries and Drives
Postfach 48 48
90026 NÜRNBERG
GERMANY

C79000-G8976-C382-01
Ⓟ 10/2015 Subject to change

Copyright © Siemens AG 2015.
All rights reserved

Preface

Validity of this manual

This manual is valid for the following product:

SIMATIC RTU3030C
Article number 6NH3112-3BA00-0XX0
Hardware product version 1
Firmware version 1.0

The RTU is used to monitor and control outlying stations that are geographically distributed and not connected to a power supply network. The RTU can store process data and transfer it via mobile wireless to a master station.

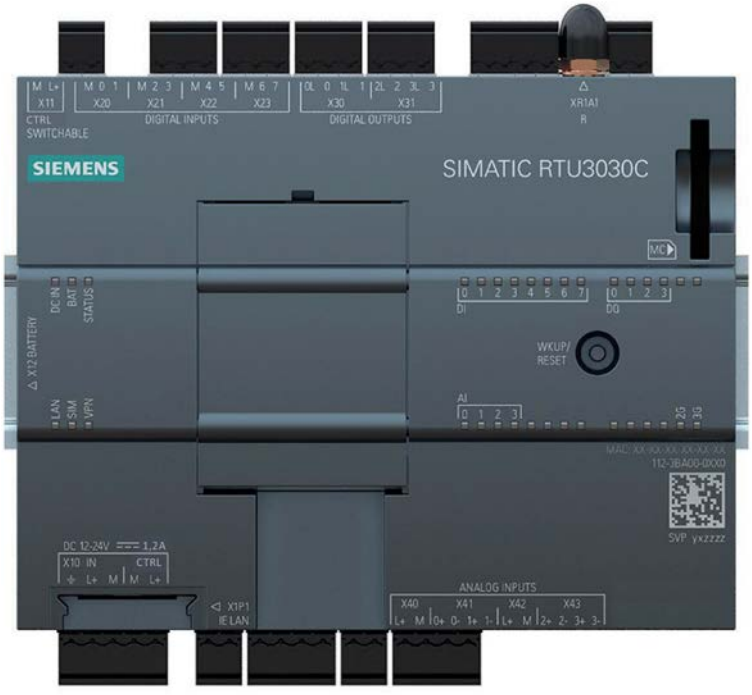

Figure 1 SIMATIC RTU3030C

You will find the the article number of the device on the front right of the housing

You will find the hardware product version of the device printed as a placeholder "X" on the right of the device (for example X 2 3 4). In this case, "X" would be the placeholder for hardware product version 1.

You will find the the MAC address of the device on the front right of the housing

You will find the IMEI (International Mobile Equipment Identity) on the right had-side of the housing.

Purpose of the manual

This manual describes the properties of this device and shows application examples.

The manaul supports you when installing, connecting up and commissioning the device.

The required configuration steps for the device are described.

You will also find instructions for operation and information about the diagnostics options of the device.

Required experience

To install, commission and operate the device, you require experience in the following areas:

- General electrical engineering
- Automation engineering
- Data transfer via mobile wireless networks and Internet

Abbreviations/acronyms

This manual often uses the following abbreviations/acronyms:

- **RTU**

  The name "RTU" (Remote Terminal Unit) is used instead of the full product name "RTU3030C".

- **WBM**

  "WBM" the acronym for the "Web Based Management" of the Web pages of the RTU for configuration and diagnostics data.

- **TCSB**

  Acronym for the control center software "TeleControl Server Basic" (version V3.0 + SP2) which is installed on a PC, the telecontrol server.

Cross references

In this manual there are often cross references to other sections.

To be able to return to the initial page after jumping to a cross reference, some PDF readers support the command <Alt>+<Left arrow>.

New in this release

First issue

Current manual release on the Internet

You will also find the current version of this manual on the Internet pages of Siemens Industry Online Support:

Link: (https://support.industry.siemens.com/cs/ww/en/view/109479322)

Sources of information and other documentation

You will find an overview of further reading and references in the Appendix of this manual.

License conditions

Note

Open source software

Read the license conditions for open source software carefully before using the product.

You will find the license conditions as a loadable file on the WBM pages of the device. You will find the description of opening or loading loading license conditions in the section General functions of the WBM (Page 62).

The packed file with the license conditions for Open Source software as the following name:

- DOC_OSS-RTU3030C_74.zip

Firmware

The firmware is signed and encrypted. This ensures that only firmware created by Siemens can be downloaded to the device.

Security information

Siemens provides products and solutions with industrial security functions that support the secure operation of plants, solutions, machines, equipment and/or networks. They are important components in a holistic industrial security concept. With this in mind, Siemens' products and solutions undergo continuous development. Siemens recommends strongly that you regularly check for product updates.

For the secure operation of Siemens products and solutions, it is necessary to take suitable preventive action (e.g. cell protection concept) and integrate each component into a holistic, state-of-the-art industrial security concept. Third-party products that may be in use should also be considered. For more information about industrial security, visit http://www.siemens.com/industrialsecurity.

To stay informed about product updates as they occur, sign up for a product-specific newsletter. For more information, visit http://support.automation.siemens.com.

Training, Service & Support

You will find information on training, service and support in the multilanguage document "DC_support_99.pdf" on the Internet pages of Siemens Industry Online Support:

38652101 (https://support.industry.siemens.com/cs/ww/en/view/38652101)

SIMATIC NET glossary

Explanations of many of the specialist terms used in this documentation can be found in the SIMATIC NET glossary.

You will find the SIMATIC NET glossary here:

- SIMATIC NET Manual Collection or product DVD

  The DVD ships with certain SIMATIC NET products.

- On the Internet under the following address:

  Link: (https://support.industry.siemens.com/cs/ww/en/view/50305045)

Trademarks

The following and possibly other names not identified by the registered trademark sign ® are registered trademarks of Siemens AG:

SIMATIC, SIMATIC NET, SIMATIC STEP 7, SINEMA, SCALANCE, TeleControl Server Basic

Table of contents

Preface 3

1 Application and properties 11

1.1 Application and use of the RTU 11

1.2 Modes and operating modes 12

1.3 Process connection - inputs / outputs 15

1.4 Control functions 15

1.5 Communications services 17

1.6 Security functions for communication 20

1.7 Other services and properties 22

1.8 Performance data 23

1.9 Scope of delivery, accessories, requirements 25

1.10 Configuration examples 28

2 LEDs, connectors, buttons, card slots 33

2.1 Overview: , Connectors, LEDs, buttons, card slots 33

2.2 LEDs 34

2.3 Interfaces and connectors 37

2.4 The button "WKUP/RESET" 40

2.5 Slots for SIM card and SD card 41

3 Connecting up, installation, commissioning 43

3.1 Important notes on using the device 43

3.1.1 Notices on use in hazardous areas 43

3.1.1.1 Safety extra low voltage 44

3.1.2 Notices on use in hazardous areas according to ATEX / IECEx 44

3.1.3 Notices regarding use in hazardous areas according to UL HazLoc 45

3.2 Requirements for commissioning 46

3.3 SD card / using and formatting SMC 47

3.4 Inserting the SIM card and SD card 47

3.5 Installing an RTU 49

3.6 Grounding and overvoltage protection 52

3.7 Connecting up the RTU 53

3.8 Commissioning and starting up the RTU 58

4 Configuration (WBM) 61

4.1 Range of functions of the WBM ... 61

4.2 General functions of the WBM ... 62

4.3 String lengths and permitted characters ... 64

4.4 Establishing the connection between RTU and configuration PC ... 67
4.4.1 Address data of the RTU ... 67
4.4.2 Establishing a connection to the WBM of the RTU ... 68

4.5 User data for the first login to the WBM ... 71

4.6 Logging in ... 72

4.7 Start page ... 73
4.7.1 Overview ... 73
4.7.2 Status ... 74

4.8 System ... 76
4.8.1 General ... 76
4.8.2 Device info ... 77
4.8.3 SD card ... 77
4.8.4 System time ... 80

4.9 Diagnostics ... 83
4.9.1 Diagnostics buffer ... 83
4.9.2 Notifications ... 84

4.10 Maintenance ... 84
4.10.1 Configuration ... 84
4.10.2 Firmware ... 87
4.10.3 Operating status ... 89
4.10.4 Online support ... 90

4.11 LAN ... 92
4.11.1 Configuration ... 92

4.12 WAN ... 93
4.12.1 Overview ... 93
4.12.2 Mobile wireless settings ... 94
4.12.3 Wireless cell ... 97
4.12.4 SMS ... 98
4.12.5 E-mail ... 98

4.13 Security ... 100
4.13.1 Overview ... 100
4.13.2 OpenVPN client ... 101

4.14 User / Recipient ... 105
4.14.1 User ... 105
4.14.2 Recipient groups ... 108

4.15 Operating mode ... 110
4.15.1 Operating modes ... 110
4.15.2 Logging ... 112
4.15.3 Power supply ... 114
4.15.4 Battery: Estimating the working life ... 117

4.16 Tags ... 118
4.16.1 Overview ... 118

4.16.2 Configuration of the tags , general parameters 119
4.16.3 Digital inputs 122
4.16.4 Digital outputs / Digital memory bits 124
4.16.5 Analog inputs 125
4.16.6 Analog memory bits 131
4.16.7 Temperature (Internal) 132
4.16.8 Power supply (external) 133
4.16.9 Battery 134
4.16.10 Texts 135

4.17 Program 137
4.17.1 Creating the user program using program blocks 137
4.17.2 Overview of the program blocks 138

4.18 Telecontrol 139
4.18.1 Overview 139
4.18.2 TeleControl Basic 140
4.18.3 DNP3 142
4.18.4 IEC 60870-5 144
4.18.5 Data points 146
4.18.6 Status IDs of the data points 152
4.18.7 Wake-up call / wake-up SMS 154

5 Programming 157

5.1 Programming the blocks 157

5.2 Often used parameters 158

5.3 Blocks for logical functions 161
5.3.1 Logical AND 161
5.3.2 Logical OR 162
5.3.3 Exclusive OR (XOR) 163
5.3.4 Logical NOT 164

5.4 Blocks for time functions 164
5.4.1 On delay 165
5.4.2 Off delay 166
5.4.3 On / Off delay 167
5.4.4 Retentive on delay 168
5.4.5 Pulse generator 170
5.4.6 Random on/off delay 170
5.4.7 Year timer 171
5.4.8 Week timer 174
5.4.9 Astronomical clock 175

5.5 Blocks for analog value functions 176
5.5.1 Triggered saving 176
5.5.2 Threshold value switch 177
5.5.3 Analog value comparator 179
5.5.4 Analog value monitoring 180
5.5.5 Min. /Max. /Mean value 181
5.5.6 Addition 183
5.5.7 Subtraction 183
5.5.8 Multiplication 184
5.5.9 Division 185

5.6 Counter blocks ... 186
5.6.1 Counters ... 186
5.6.2 Elapsed time counter ... 188
5.6.3 Frequency counter ... 189
5.6.4 Flow measurement ... 190

5.7 Blocks for messages ... 192
5.7.1 Sending SMS messages ... 192
5.7.2 Send e-mail ... 193

5.8 Relay blocks ... 195
5.8.1 Latching relays ... 195
5.8.2 Current impulse relay ... 197

6 Diagnostics and maintenance ... 201

6.1 Diagnostics options ... 201

6.2 Loading firmware ... 202

6.3 Resetting to factory settings ... 203

6.4 Replacing the RTU ... 205

6.5 Batteries: Replacement, recycling and disposal ... 205

7 Technical data ... 207

A Approvals ... 213

B Dimension drawings ... 219

C Accessories ... 221

C.1 Battery module ... 221
C.1.1 Battery module housing ... 222
C.1.2 Battery ... 223

C.2 SD card / SMC ... 224
C.2.1 Compatible SD cards ... 224
C.2.2 Siemens Memory Card (SMC) ... 224

C.3 Antennas and accessories ... 225
C.3.1 Antenna ANT896-4ME ... 225
C.3.2 Antenna ANT794-4MR ... 225
C.3.3 Antenna accessories, screw connections ... 226

C.4 Protective housing ... 228
C.4.1 Aluminum protective housing ... 228
C.4.2 Stainless steel protective housing ... 230

C.5 Overvoltage protection modules ... 232
C.5.1 Overvoltage protection module for the antenna cable ... 232
C.5.2 Overvoltage protection modules for supply and signal cables ... 232

D Documentation references ... 233

Index ... 237

Application and properties 1

1.1 Application and use of the RTU

Applications

The RTU is intended for monitoring and controlling small outlying stations without a connection to a power supply network.

In telecontrol networks. The RTU is used to connect the outlying stations to the master station via mobile wireless.

Core functions

The RTU supports the following core functions:

- **Energy-saving operation**

  Thanks to the energy-saving operation with various operating modes (see below), the RTU is predestined for use in geographically distributed outlying stations, measuring points and other applications without connection to a power supply network.

  The RTU can be supplied with power by battery modules or an external voltage source, for example by solar modules.

- **Process connection**

  For the process connection, the RTU is equipped with inputs and outputs:

  – 8 x DI (digital inputs)

  – 4 x DQ (digital outputs)

  – 4 x AI (analog inputs)

- **Controller**

  For simple control tasks, the process data can be linked via program blocks.

- **Storing process data (Logging)**

  The RTU provides the option of storing the process data of the connected sensors and the values of some internal parameters on an SD card.

  Use this option when there is no communications partner in the master station for the RTU.

  If you transfer the process data via mobile wireless to the master station, you can also use the function (optional).

- **Communication with the control room**

  If a communications partner is available in the master station, the RTU can send process data to the control room. The data is transferred via the mobile wireless service GPRS or UMTS.

- **Telecontrol protocols**

  For communication with the master station, the RTU supports the following protocols:

  – TeleControl Basic

  – DNP3

  – IEC 60870-5-104

  You will find detailed information about the protocols in the section Communications services (Page 17).

Configuration examples

You will find configurations of the RTU in the section Configuration examples (Page 28).

Configuration and programming of the RTU in the WBM

Configuration

You configure the parameters of the RTU itself, its inputs and outputs, control functions and communication parameters conveniently in the Web Based Management (WBM). The WBM consists of Web pages stored on the RTU. From a configuration PC you connect to the WBM.

Programming

You program in the WBM with the following actions:

- Keyboard entries
- Selection of options in drop-down lists
- Enabling check boxes
- Working with buttons ("Apply", "Add", "Load", "Search" etc.)

1.2 Modes and operating modes

Modes

The modes of the RTU are not configured explicitly but result from the configuration of the communications partner and the existence of an SD card.

The RTU can be operated one or both of the following modes:

TeleControl

In the "TeleControl" mode, the RTU can send process data via the mobile wireless network to a master station (see also "Communication mode" below).

This mode is adopted when a communications partner is configured in the master station.

As an option, process data can be stored on an SD card. To do this logging must be enabled in the WBM in "Operating mode".

Logging

In the "Logging" mode the RTU has no communications partner in the master station. Instead, the RTU stores the process data.

This operating mode is adopted when logging must be enabled in the WBM in "Operating mode".

In the "Logging" mode, the RTU requires an SD card where it can store the process data. The stored process data can be read out from the SD card or, if connected to a mobile wireless network, sent cyclically by e-mail or with a direct connection loaded on a PC.

Operating modes

The RTU can adopt the following operating modes:

- Sleep mode
- Update mode
- Communication mode
- Service mode

Sleep mode

In the energy-saving standard operating mode the updating of the inputs and outputs, the communications functions, the LEDs and the self check function (see section Other services and properties (Page 22)) of the RTU are turned off.

The RTU interrupts the sleep mode in the following situations:

- Pressing the button "WKUP" and changing to the service mode
- Configured change to the update mode (WBM > Operating mode)"

  With the inputs, other specific update cycles can be configured (WBM > "Tags").
- Configured change to the communication mode (WBM > Operating mode)"
- Pending diagnostics message with configured change to the communication mode (WBM > "Diagnostics" > "Notifications")
- Cyclic interruption of the sleep mode to fetch a wake-up SMS (WBM > "Operating mode")
- Occurrence of certain events:
  - Creating a new log file with a configured change to the communication mode to transfer the old log file
  - Further events, refer to the section "Update mode".

In the "TeleControl" mode, the RTU in sleep mode has the greatest energy-saving potential when using the "TeleControl Basic" protocol.

Update mode

The update mode is controlled by the configurable update cycle, refer to the section Operating modes (Page 110).

In the Update mode, the RTU runs through the following steps:

- Reading the inputs configured for the current cycle.
- Processing of the program blocks
- Writing the outputs
- Saving the process data data on the SD card (with Logging activated)

After updating, the RTU returns to sleep mode, or changes to the communication mode if this is configured. The update cycle and communication cycle can also run independently of each other.

In addition to the configured update cycle, the RTU changes from the sleep mode to the update mode when configurable events occur. The following events can be configured:

- Value change at the analog input "AI0"
- Edge change at a digital input
- Triggering of timers of program blocks, for example with a pulse generator or with the on/off delay.

Note that configured events lead to higher current consumption.

Communication mode

In the Communication mode, the RTU performs the following tasks:

- Sending the data messages to the configured communications partner in the master station
- Sending stored messages (SMS messages, e-mails)
- Synchronization of the time of day if configured.
- Diagnostics

  In addition to the tasks listed above, in the communication mode a connection can be established to the WBM of the RTU by the telecontrol server or the configuration PC. This makes diagnostics of the RTU and maintenance work possible.

The times of the changeover to the communication mode can be configured as a cycle and on the occurrence of events. After transferring data, the RTU returns to the sleep mode. As long as there is no update cycle running.

Connection establishment as a result of receiving a wake-up SMS message from the telecontrol server or from a mobile phone can be configured. Remember that this increases the current consumption of the RTU. For more detailed information, refer to the section Wake-up call / wake-up SMS (Page 154).

Service mode

The service mode is enabled by briefly pressing the (< 1 s) of the "WKUP" button.

The changeover to the Service mode as the following effect:

- Turning on the LEDs that were turned off in the other operating modes to reduce energy consumption.
- Activation of the LAN interface

  With the LAN interface of the RTU activated, a configuration PC can access the Web pages (WBM) of the RTU.

The Service mode is intended for commissioning and for service purposes on site, for example, to replace a battery module.

The service mode can be active parallel with the update mode and communication mode.

The service mode can also be activated permanently.

1.3 Process connection - inputs / outputs

Inputs, outputs

The RTU provides the following inputs and outputs for the process connection:

- 8 digital inputs

  The first two digital inputs can also be configured as fast counter inputs up to 5 kHz.
- 4 digital outputs
- 4 analog inputs

  The input AI0 can also be monitored in sleep mode.

You will find details in the section Interfaces and connectors (Page 37).

1.4 Control functions

Control functions

The control functions of the RTU are implemented by creating a user program made up of program blocks. The blocks are displayed graphically and programmed on integrated Web pages (WBM), see section Programm (Page 137).

The linking with inputs and outputs and the programming of function values is performed conveniently with drop-down lists or by entering values.

The following groups of program blocks are available:

- Logical functions

  Logical AND / OR, NOT (inverter), exclusive OR
- Timer functions

  Delay blocks, pulse generator, timer block
- Analog value functions

  Threshold value and comparator blocks, arithmetic functions etc.
- Counter blocks

  Various counter blocks
- Blocks for messages

  Sending of SMS messages/e-mails
- Relay blocks

  Latching relays, current impulse relays

For a description of the program blocks, refer to the section Programming (Page 157).

1.5 Communications services

Protocols for communication with a master station

Depending on the loaded firmware variant, the RTU supports one of the following protocols for communication with a master station:

- **TeleControl Basic**

  This is a proprietary protocol of Siemens for telecontrol applications.

  The IP-based communications protocol is used to connect the RTU to the application TCSB (TeleControl Server Basic V3.0 + SP2).

  TCSB is installed on a PC in the master station, the telecontrol server. Via the OPC-DA or OPC-UA server of TCSB, and OPC client can access the process data of the RTU. For the TCSB manual, see /4/ (Page 234).

  Apart from the RTU, several S7-1200 CPs also support the protocol. It allows especially energy-saving operation since communications connections are only established temporarily stop

- **DNP3**

  The RTU functions as a DNP3 station (Outstation).

  Communication is based on the DNP3 SPECIFICATION Version 2.x (2007/2009).

  The part of the specification "Supplement to Volume 2 - SECURE AUTHENTICATION" is not implemented in the RTU. Instead of this, the RTU can establish a VPN tunnel using OpenVPN for secure transmission, refer to the section Security functions for communication (Page 20).

  You will find a detailed overview of the attributes and properties specified in the DNP3 protocol and supported by the RTU in the DNP3 device profile, see /2/ (Page 234).

  You will find the supported object groups and variations in the section Data points (Page 146).

  Communications partners (DNP3 masters) of the RTU can be:

  – SIMATIC PCS7 TeleControl
  – SIMATIC WinCC TeleControl
  – A TIM module with DNP3 capability (TIM 3V IE DNP3 / TIM 4R IE DNP3)

    For the manual of the TIM module see /8/ (Page 235).
  – Third-party systems that support the DNP3 specification named above.

- **IEC 60870-5**

  The RTU functions as a substation (slave).

  Communication is based on the specification IEC 60870-5 Part 104 (2006).

  Communications partners (IEC masters) of the RTU can be all master systems that support the specification named above.

  Along with the IEC protocol, the RTU uses the security mechanisms of "OpenVPN", see section Security functions for communication (Page 20).

You will find a detailed overview of the attributes and properties specified in the IEC specification and supported by the RTU in the IEC device profile, see /3/ (Page 234).

You will find the supported IEC type identifiers as in the section Data points (Page 146).

When it ships, the RTU is loaded with the firmware variant for the "TeleControl Basic" protocol. For the firmware variants for the two other protocols, refer to the next section.

Firmware for the DNP3 and IEC protocol

To use the communications protocols. "DNP3" or "IEC", you need to load the corresponding firmware variant on the RTU.

You can obtain the relevant firmware file free of charge from Siemens Industry Online Support

- Link: (http://www.automation.siemens.com/aspa_app/)

  Here, you will find a contact.

- Link: (https://support.industry.siemens.com/my/ww/en/requests)

  After logging on, you can make a query here.

You will find the description of loading firmware files in the section Loading firmware (Page 202).

Other communication services

The RTU can send messages for configured event classes (diagnostics buffer entries) either as SMS messages or as e-mails.

- **SMS (reception)**

  The following SMS messages can be received:

  – Wake-up SMS message configured in the Configuration and Monitoring Tool (CMT) of TCSB for establishing a connection to the telecontrol server

  – Manually triggered wake-up SMS message from the Web server of TCSB for establishing a connection to a PC (via the telecontrol server)

  – SMS message as request for a diagnostics SMS message

  You enable receipt of SMS messages in the WBM, refer to the section SMS (Page 98).

- **SMS (sending)**

  The following SMS messages can be sent:

  – SMS message if diagnostics messages occur, refer to the section Notifications (Page 84).

  – SMS message with event-related process data via program blocks, refer to the section Sending SMS messages (Page 192).

  – Diagnostics SMS message, refer to the section Diagnostics options (Page 201).

  – SMS messages if certain events occur relating to the SD card or battery module

- **E-mail (sending)**

  The following e-mails can be sent:

  – E-mail if diagnostics messages occur, refer to the section Notifications (Page 84).

  – E-mail with event-related process data via program blocks, refer to the section Send e-mail (Page 193).

  – E-mails with process data (log file) using the logging function, refer to the section Logging (Page 112).

  – E-mails if certain events occur relating to the SD card or battery module

  In the attachment of an e-mail, there is the option of transferring the process image, the log file or the entire diagnostics buffer. The attachment is transferred uncompressed or compressed as a ZIP archive.

  You configure the access data and general settings for using the e-mail service in the WBM, refer to the section E-mail (Page 98).

  For information on the configurable security option "STARTTLS" when sending e-mails, refer to the section Security functions for communication (Page 20).

  You configure further parameters of notifications on the following WBM pages:

  – Recipient of the messages, refer to the section User / Recipient (Page 105).

  – Message texts, refer to the section Texts (Page 135).

- **HTTP**

  HTTP is used for the following connections of the RTU:

  – Connection of the configuration PC to the RTU via the LAN interface

  – Connection of the configuration PC to the RTU via mobile wireless (via an OpenVPN tunnel)

    You will find information on usage in the section Establishing a connection to the WBM of the RTU (Page 68).

  – Connection of a service PC to the RTU via the Web server of TCSB more

  The communications partners always connect to the WBM of the RTU.

- **OpenVPN**

  More OpenVPN is used for mobile wireless connections of the RTU with a DNP3 or IEC master and to a configuration PC.

  You will find further information on using OpenVPN in the section Security functions for communication (Page 20).

1.6 Security functions for communication

General security functions

As general protection the RTU supports the following functions:

- **Configuration of authorized phone numbers on the RTU**

  To authorize subscribers that are allowed to establish connection with the RTU by SMS message or phone call, the phone numbers of the individual subscribers are configured on the RTU.

- **STARTTLS**

  For the secure transfer of encrypted e-mails

  As an alternative, the following transfer options can be set:

  – Only STARTTLS

    In this case, a certificate is required.

  – STARTTLS, when possible

    STARTTLS is used when the communications partner and the SMTP server support it. Otherwise transfer is unencrypted.

  STARTTLS uses ports no. 25 and 587.

  Ask your e-mail service provider which option is supported.

Security functions of the "TeleControl Basic" protocol

The protocol contains the following Security functions:

- **Encrypted communication with the Telecontrol server**

  As an integrated security function, the telecontrol protocol encrypts the data for transfer between the RTU and telecontrol server.

  The interval for the key exchange between RTU and telecontrol server is set to 1 hour.

- **Telecontrol password**

  For authentication of the RTU at the telecontrol server

OpenVPN

For different connections, the RTU uses the VPN technology of OpenVPN. Between the RTU and the connection partner a VPN tunnel is established via an open VPN server and the RTU is the OpenVPN client.

The RTU uses the security functions of the "OpenVPN" service for the following connections:

- Connections of the RTU to a DNP3 master
- Connections of the RTU to an IEC master
- Connections of a configuration PC to the RTU via the Internet (HTTP) and the mobile wireless network.

  For the connection of a service PC to the RTU via the Web server of TCSB no OpenVPN is required.

To establish the connections listed above an OpenVPN server is required (see below).

OpenVPN is implemented on the RTU as a TUN device (routing mode). The following security functions are supported:

- Encryption

  The data to be transferred is encrypted with the CBC method. As standard, AES-256, DES-168 (DES-EDE3) or BF (Blowfish in Cipher Block Chaining) can be used:

- Authentication of the connection partner

  As hash algorithms for authenticating the user data SHA-1, SHA-224 or SHA-256 can be used.

They RTU uses OpenVPN version V2.3.4.

OpenVPN server

The OpenVPN server must support the following functions:

- OpenVPN V2.3.3 or higher
- OpenSSL with TLS as of version 1.2
- Configuration of the server for TLS version 1.2 four
- Use of "tls-version-min 1.0" in the OpenVPN configuration

The Siemens application "SINEMA Remote Connect - Server" (SINEMA RC Server) is recommended. For the manuals see /5/ (Page 234) and /7/ (Page 235).

If SINEMA RC Server is used as the OpenVPN server, the communications partner of the RTU must be configured in SINEMA RC Server as an OpenVPN client. The communications partner of the RTU as well as the RTU logs on as an OpenVPN client SINEMA RC Server.

Configuring the OpenVPN functions

- You will find details on using HTTP for connections between the configuration PC and RTU in the section Establishing a connection to the WBM of the RTU (Page 68).

  There you will also find instructions on establishing an open VPN connection from the configuration PC.

- For a description of the configuration of the OpenVPN properties of the RTU, refer to the section OpenVPN client (Page 101).

1.7 Other services and properties

Other services and properties

- **Installation**

  The RTU is mounted on a standard DIN 35 mm rail.

  For installation outdoors, and optional protective housing is available, refer to the section Scope of delivery, accessories, requirements (Page 25).

- **Data point configuration**

  The process data is configured via inputs and outputs and stored in the operand areas input, output and bit memory. The individual operands are mapped and addressed as data points for the communication. The individual data points are processed one-to-one in the control system.

- **Management of users and user groups**

  To control access to the WBM, the RTU has a user management. The users authorized for WBM access are configured in the WBM.

  By setting up different recipient groups for certain types of SMS message and e-mails sent by the RTU, the messages can be assigned to different groups, for example operation, service etc.

- **IP configuration**

  The essential features of IP configuration are as follows:

  – VLAN interface and the WAN interface of the RTU support IP addresses according to IPv4.

  – Address assignment of the LAN interface

    The IP address and the subnet mask can be set manually in the configuration.

    For the configuration PC to be connected, the IP address can be assigned by an integrated DHCP server.

- Time-of-day synchronization

  When connecting the RTU to the mobile wireless network, the following options are available for time-of-day synchronization:

  – Time from partner

    If the RTU has a communications partner in the master station, it always obtains its local time of day from the partner.

    In most cases, the time of day is transferred as UTC time.

    PCS7 as master transfers the time of day with the DNP3 protocol as UTC and with the IEC protocol as the local time of the PCS7 PC.

    Without a communications partner in the master station, the time of day can be obtained alternatively, using the following services:

  – Time of day from the mobile wireless network

    Possible if the network provider supports the NITZ mechanism (Network Identity and Time Zone).

  – NTP

    Time-of-day synchronization using NTP is available only when the RTU is connected to the mobile wireless network. The LAN interface of the RTU is only intended for connection to the configuration PC.

  For more information, refer to the section System time (Page 80).

  For information on the format of the time stamp, refer to the section Overview (Page 118).

1.8 Performance data

Program blocks of the controller

For control tasks, 30 types of program blocks are available.

In total, a maximum of 32 program blocks can be created in up to eight networks..

For a description of the blocks, refer to the section Control functions (Page 15).

Number of communications connections for productive data transfer

- Configurable connections

  The following number of connections can be configured as an alternative:

  – 1 connection to the telecontrol server V3

  – 1 connection to a DNP3 server

    As an option, a substitute master can be configured.

  – 1 connection to an IEC master

    As an option, a substitute master can be configured.

  Also:

  – 1 connection to an OpenVPN server

    As an option, a substitute server can be configured.

- Productive connections

  In total the following connections can be established at the same time:

  – Max. 1 connection to a telecontrol server, DNP3 master or IEC master

  – Max. 1 connection to the VPN server

Number of HTTP connections for access to the WBM

Max. 2 connections (WBM sessions) via HTTP can be established to the WBM of the RTU at the same time. No configuration or firmware file can be loaded simultaneously via both WBM sessions.

User data and time stamps of messages

The individual process values of the inputs/outputs are transferred to the master station in messages with a time stamp. You will find details in the section System time (Page 80).

Frame memory (send buffer)

The RTU has a send buffer for the values of data points configured as an event.

The RAM area for the send memory has a size of 256 KB. Due to the different frame sizes with the three communications protocols, the maximum capacity of the send buffer differs for the the three protocols.

Maximum number of frames in the send buffer:

- TeleControl Basic: Max. 9345 frames
- DNP3: Max. 10907 frames
- IEC: Max. 5037 frames

Memory space for process data in the "Logging" operating mode

Memory space for process data in the "Logging" operating mode is only limited by the size of the plugged in SD card.

Texts for messages (SMS / emails)

Up to 20 texts can be configured in the WBM for sending by e-mail or SMS.

Every text can contain up to 6 placeholders for process data.

Buffer for messages

The RTU stores up to 12 e-mails and up to 12 SMS messages that should not or cannot be sent immediately.

The RTU can change to the communication cycle when a configurable number of stored messages is reached, refer to the WBM pages "WAN" > "SMS" or "E-mail".

1.9 Scope of delivery, accessories, requirements

Components supplied with the RTU

The following positions ship with the RTU:

- RTU3030C
- Terminal blocks for the electrical connections of the RTU
- Slide for SIM card (inserted in the compartment of the SIM card)
- Instruction sheet with important information

Required accessories and requirements

Apart from the RTU the following accessories are necessary and do not ship with the product:

- **Power supply**

  You require a power supply for the RTU, optionally:

  – External power supply (provided on-site)

  and /or

  – Battery modules (see section "Optional accessories")

- **LAN cable**

  For the connection of the configuration PC to the LAN interface of the RTU, you require an ITP cable Cat 5.

Requirements for the configuration PC

- **Web browser**

  To configure the RTU you require access to the integrated Web pages (WBM) of the RTU. For this you require a configuration PC with one of the following Web browsers, at least in the specified version:

  – Microsoft Internet Explorer Version 10

  – Mozilla Firefox Version 38.0.2

  – Google Chrome Version 43

- **OpenVPN server for access to the WBM of the RTU via the mobile wireless network**

  You will find the requirements and a description of the procedure in the section Establishing a connection to the WBM of the RTU (Page 68).

Optional accessories

Apart from the RTU the following accessories may be necessary and do not ship with the RTU:

- **Battery module**

  If no power supply is available locally in the area of the station (RTU), you require two battery modules each with a suitable batttery.

  The battery modules and the batteries are available as accessories, refer to the appendix Battery module (Page 221).

- **Protective housing**

  With higher requirements for the protection of the RTU, you require a suitable protective housing.

  Two suitable protective housings are available in the accessories program of the RTU, see appendix Aluminum protective housing (Page 228).

- **SD card**

  For the "Logging" mode you require an SD card.

  If you need to replace the RTU, you can also use the SD card to transfer the configuration data stored on the RTU being replaced to the new device. Every change to the configuration data is saved on a plugged in SD card.

  . You can also use an SD card to copy the configuration data of an RTU to other RTUs. This is particularly useful in large projects with many stations because only the station-specific data needs to be adapted for each RTU.

  You will find information on using the SD card in the section Slots for SIM card and SD card (Page 41).

Master station

When using the "TeleControl Basic" protocol

- **Master station**
  - PC with accessories
  - TCSB V3.0 +SP2
  - Router e.g. SCALANCE M812

When using the DNP3 or IEC protocol

- **Firmware**

  To use the DNP3 or IEC protocol you require the relevant firmware variant for the RTU, see section Communications services (Page 17).

- **Master station**
  - PC with accessories
  - The relevant master application
  - Security module SCALANCE S615

- **OpenVPN server**

  To use the DNP3 and IEC protocols you need to use the OpenVPN protocol. You require:

  – An OpenVPN server, see section Security functions for communication (Page 20).

  – The CA certificate of the server

  – The configuration of the client on the OpenVPN server

  Importing the files for authentication of the RTU is described in the section OpenVPN client (Page 101).

Accessories for mobile wireless communication

The following accessories are necessary if the RTU communicates with a master station using mobile wireless, if data of the station is to be sent by SMS or e-mail or if the RTU is to synchronize its time of day via the mobile wireless network (also via NTP).

- **Antenna**

  Only use antennas from the accessories program for the RTU, refer to the section Antennas and accessories (Page 225).

- **Cabinet feedthrough for the antenna and flexible connecting cable for the protective housing**

  See appendix Antenna accessories, screw connections (Page 226).

- **Mobile wireless contract / SIM card**

  If the RTU is to communicate with a partner in the master station using the mobile wireless network, you require a suitable mobile wireless contract with associated SIM card. Depending on the contract, the RTU receives a dynamic or fixed IP address assigned by the mobile wireless network provider.

  If the RTU is to transfer not only messages, but also process data, the wireless contract must support the sending of data.

- **Communications partner**

  Depending on the protocol you are using, you require a suitable communications partner for the RTU in the master station.

  – Telecontrol server ("TCSB" version V3.0 SP2)

    You will find information on this in the manual, see/4/ (Page 234).

  – DNP3 master

  – IEC master

  The communications partner in the master station must be reachable from the Internet via a router, for example SIMATIC NET SCALANCE M812.

1.10 Configuration examples

Below, you will find configuration examples for applications of the RTU3030C.

You will find references to the configuration of individual communications functions in the section Communications services (Page 17).

You will find a diagram of the configuration of the configuration PC that accesses the WBM of the RTU using HTTP and OpenVPN in the section Establishing a connection to the WBM of the RTU (Page 68).

SMS / e-mail

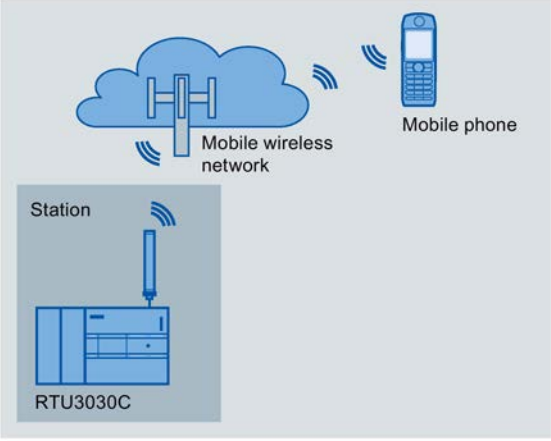

Figure 1-1 Sending SMS messages by the RTU

Sending SMS messages / e-mail

The RTU can send messages (SMS / e-mails) for configurable events via program blocks or using the logging function.

After a request from a mobile telephone, a diagnostics SMS message can be sent.

In the attachment of e-mails, you have the option of transferring the process image, the diagnostics buffer or the current log file.

Receiving SMS messages

The RTU can be wakened out of the sleep mode by the telecontrol server or by the SMS message of a mobile telephone to establish a connection to the communications partner

All mobile phones that are permitted to send a wake-up SMS message or the request for a diagnostics SMS message to the RTU, must be enabled with the phone number of every user in the WBM of the RTU ("Wake-up call allowed").

Configuration using the "TeleControl Basic" protocol

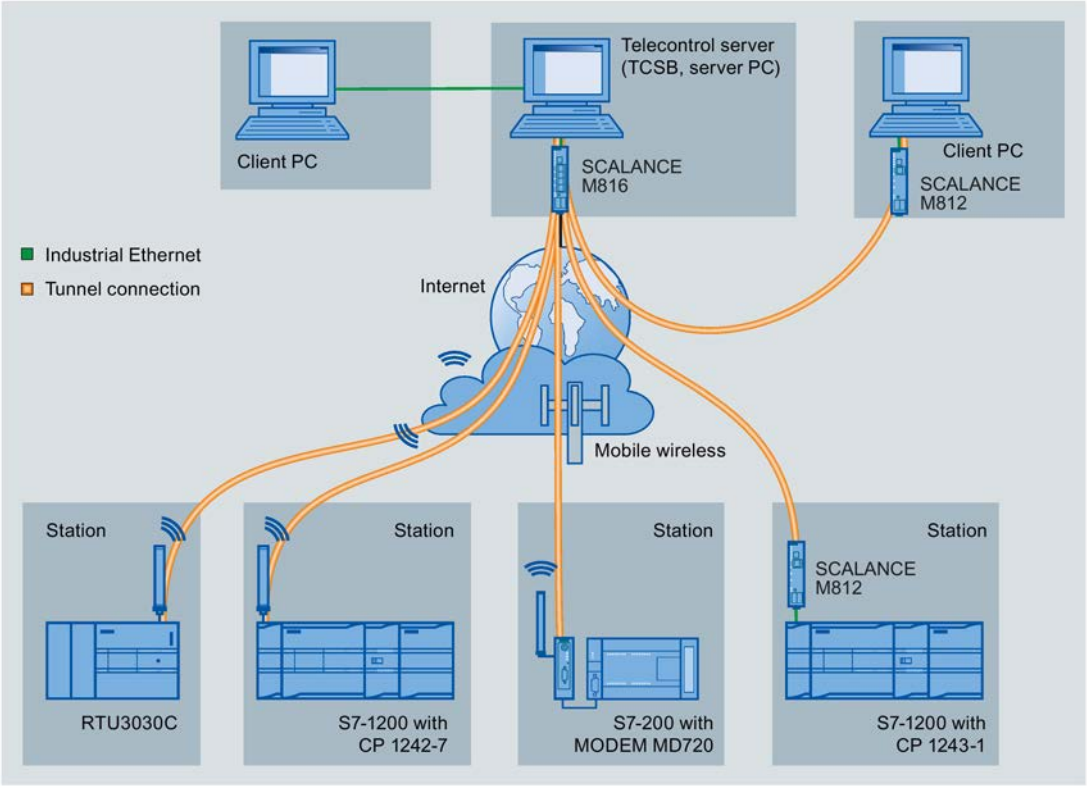

Figure 1-2 Communication of the RTU and other station types with a master station

When using the "TeleControl Basic" protocol, the RTU communicates via the mobile wireless network with the telecontrol server. The "TeleControl Server Basic V3.0 + SP2" (TCSB) application is installed on the telecontrol server in the master station.

The RTU transfers its process data to the telecontrol server. Using its integrated OPC server, the telecontrol server exchanges data with the OPC client of the control room.

The OPC client has write access to the RTU via the telecontrol server.

DNP3 configuration

The following example contains a configuration with stations that communicate with the master via the mobile wireless network and the Internet.

In this example, the master is duplicated. The two devices of the DNP3 master (main and substitute master) in the master station are addressed by the RTU using one DNP3 address but two different IP addresses.

The connections between stations and master are via an OpenVPN server.

When using the DNP3 protocol, for example, SIMATIC PCS 7 TeleControl or the system of a third-party provider can be used as the master. If you use SIMATIC PCS 7 TeleControl as the DPN3 master, you require the necessary DPN3 driver.

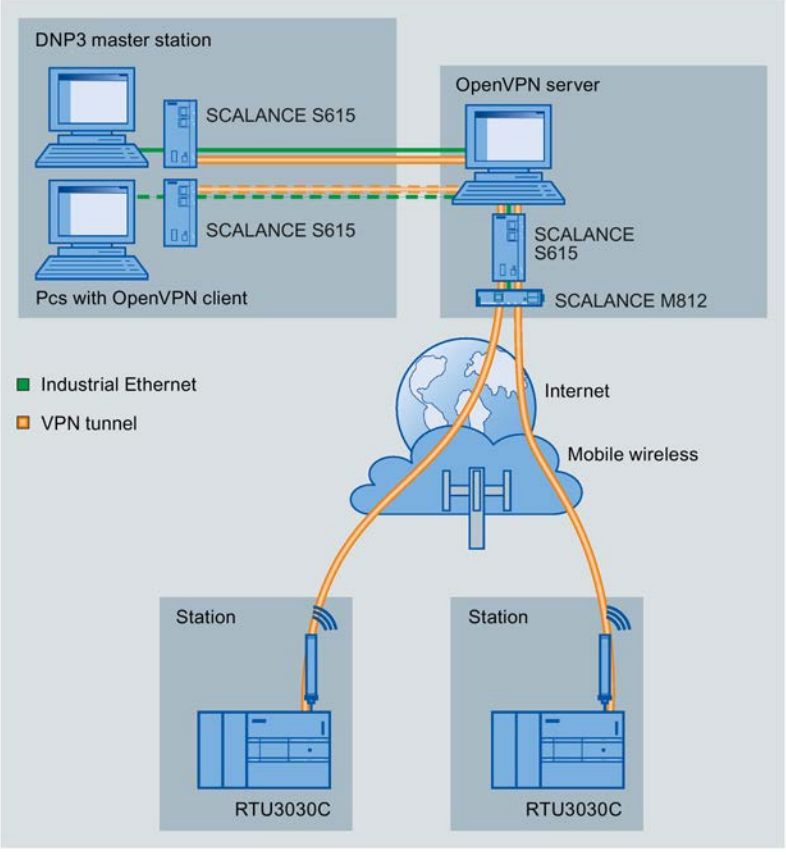

Figure 1-3 Communication of the RTU with a DNP3 master station

IEC configuration

The following example contains a configuration with stations that communicate with the master via the mobile wireless network and the Internet.

The connections between stations and master are via an OpenVPN server.

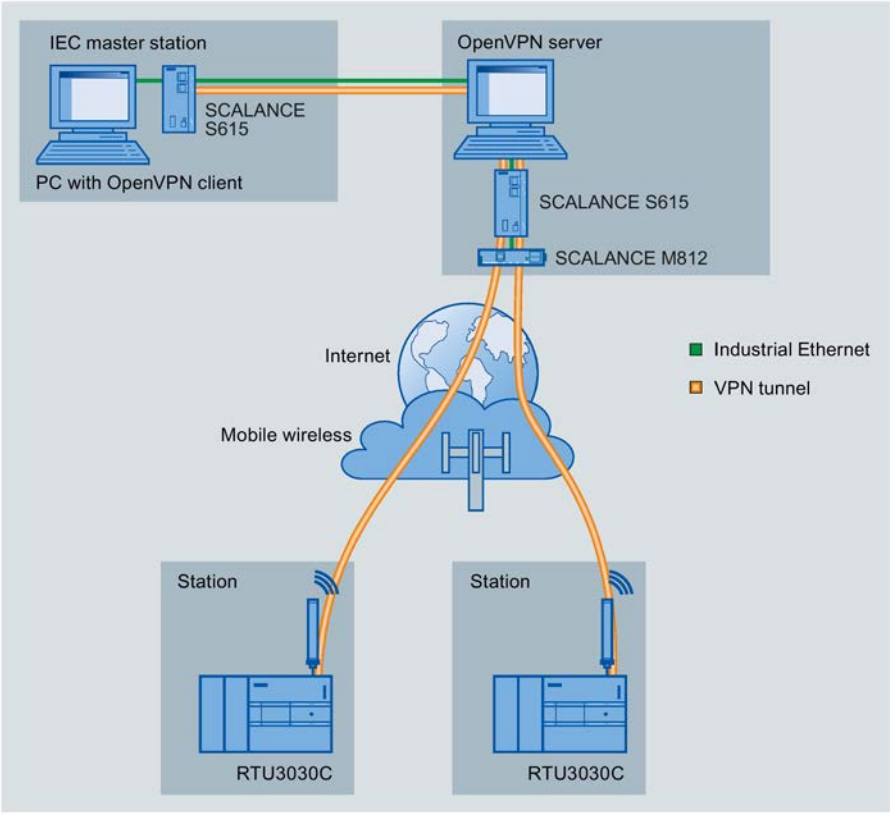

Figure 1-4 Communication of the RTU with an IEC master station

LEDs, connectors, buttons, card slots

2

2.1 Overview: , Connectors, LEDs, buttons, card slots

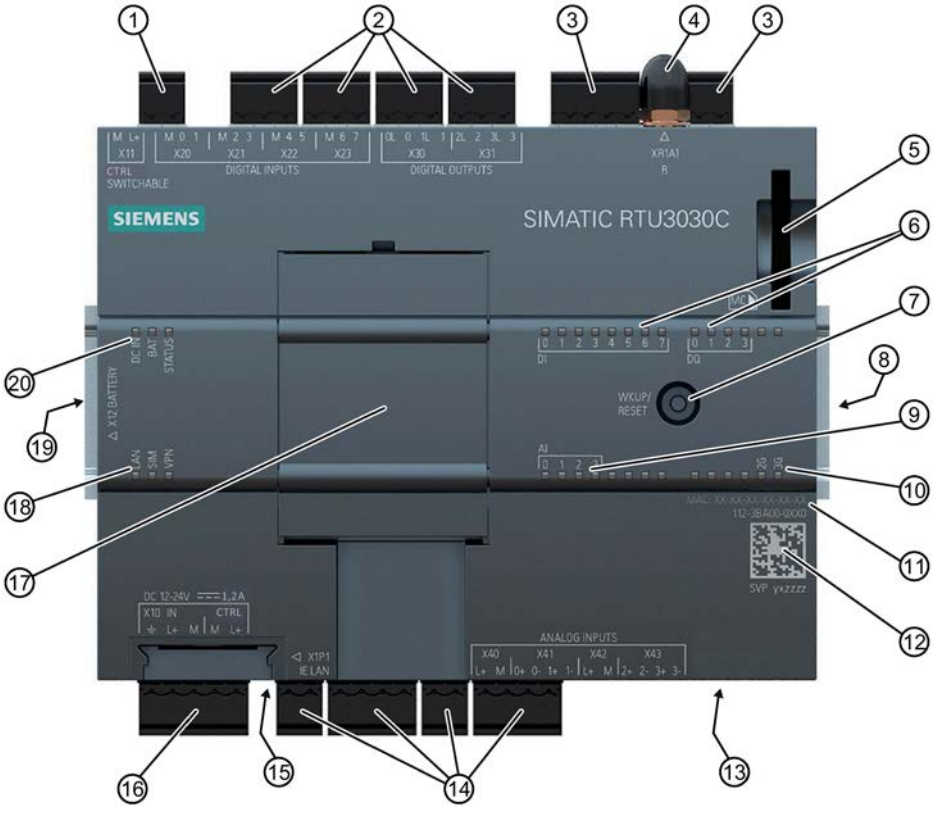

Figure 2-1 Location of the LEDs, connectors, buttons, card slots

Table 2- 1 Meaning of the number symbols

①	X11: Control output to supply sensors and actuators	⑪	MAC address
②	X20..X23: Terminals for digital inputs	⑫	Serial number as 2D matrix code and alphanumeric
③	X30..X31: Terminals for digital outputs	⑬	◀ SIM: Receptacle for SIM card (underside)
④	XR1A1 R: SMA socket for the antenna	⑭	X40..X43: Terminals for analog inputs
⑤	MC ▶: Receptacle for SD card	⑮	X1P1: Ethernet interface RJ-45 (underside)
⑥	DI / DQ: Status LEDs for digital inputs/outputs	⑯	X10: Control output to supply sensors and actuators
⑦	WKUP/RESET: button	⑰	*Slot for signal boards - not currently required*
⑧	*Service interface (on the side) - not required*	⑱	Connection status LEDs "LAN", "SIM", "VPN"
⑨	AI: Status LEDs for analog inputs	⑲	X12BATTERY: Connector for battery module (on the side)
⑩	Wireless status LEDs	⑳	RTU status LEDs "DC IN", "BAT", "STATUS"

2.2 LEDs

LEDs of the module

To reduce current consumption, the LEDs are turned off during operation of the RTU. The LEDs are only turned on in service mode.

The current statuses of the LEDs are always visible in the WBM of the RTU.

To signal the various statuses of the RTU, its inputs and outputs and the communications properties, the RTU has the following LEDs:

Table 2- 2 Overview of the LED groups

Name	Possible colors	Meaning
RTU status		
DC IN	green / yellow	Status of the external power supply
BAT	green / yellow	Use of the battery modules
STATUS	green / red	Display of the mode, operating mode and errors
Connection status		
LAN	green / yellow	Status of the LAN interface:
SIM	green / red	Status of the wireless interface and the SIM card
VPN	green	Status of the tunnel connection
Status of the digital inputs (DI) and digital outputs (DQ)		
DI 0 ... 7 DQ 0 ... 3	green	Status of the digital inputs and outputs
Status of the analog inputs (AI)		
AI 0 ... 3	red	Status of the analog inputs and the connected sensors
Wireless status		
2G 3G	green / yellow	Status of the data transfer and signal quality of the wireless link

Information on the tables

LED symbols

The LED symbols in the following tables have the following significance:

Table 2- 3 Meaning of the LED symbols

Symbol			
LED status	OFF	ON (steady light)	Flashing

"Meaning" column

If a cell in the "Meaning" column has several entries with bullets, all or only individual meanings may apply.

RTU status LEDs

Table 2- 4 RTU status LEDs

Name	Color	Meaning
DC IN	☐	External power OFF
	■	External voltage ON, voltage value in the range 10.8 ... 28.8 V, but not configured
	■	External voltage ON, voltage value in the range 10.8 ... 28.8 V
BAT	☐	No power supply from battery modules
	■	Power supply from battery module 1 (directly on the RTU)
	■	Power supply from battery module 2 (to the left of battery module 1)
STATUS	☐	No error and sleep mode or service mode or update mode
	flashing green	• Start-up after power ON • Configuration data is changed. • Resetting to factory settings initiated
	green	Communication mode
	red	• Fault in the power supply – Battery supply that is not configured. – Battery supply with the configuration of an external power supply – Critical battery capacity – External power supply that is not configured. • Mobile wireless error – Connection error – Error accessing the SIM card – Incorrect PIN • Time-of-day synchronization failed • Error in Logging – SD card does not exist – Access error • Sending an e-mail failed For diagnostics, refer to the messages in the diagnostics buffer.
	flashing red	• No configuration • Duplicate IP address

Connection status LEDs

Table 2- 5 Connection status LEDs

Name	Color	Meaning
LAN		• No connection to the LAN • LAN interface disabled
		Connection to the LAN
		Data transfer on the LAN
SIM		SIM card has not yet been checked
	red	SIM card error
	flashing red	Wrong PIN configured
	green	PIN was accepted.
VPN		No VPN tunnel established
		VPN tunnel established

Wireless status LEDs

Table 2- 6 Wireless status LEDs

Name	Color	Meaning
2G / 3G		• No communication mode • No reception or very bad wireless link quality (< -97 dBm) • 2G or 3G disabled in the configuration
		Medium wireless link quality (-95 ... -81 dBm)
		Data transfer with medium wireless link quality (-95 ... -81 dBm)
		Good wireless link quality (> -79 dBm)
		Data transfer with good wireless link quality (> -79 dBm)

Status LEDs of the inputs (DI, AI) and outputs (DQ)

Table 2- 7 IO status LEDs

Name	Color	Meaning
DI	☐	• Last read status of the "OFF" input • DI0 / DI1 configured as counters • Input not configured:
	■	Last read status of the "ON" input
DQ	☐	• Last read status "OFF" (relay open) • Output not configured:
	■	Last read status "ON" (relay closed)
AI	☐	• No error • Input not configured:
	■	Errors: • Measured value outside the measuring range (overflow, underflow) • Cable break (with 4...20 mA signal) • Overload of the measuring amplifier of the RTU

LEDs with a firmware update

After activating a new firmware file, the following LEDs are lit briefly when the RTU restarts:

- Red: STATUS
- Green: DC IN, BAT, SIM, VPN

2.3 Interfaces and connectors

You will find the location of the individual RTU connectors in the section Overview: , Connectors, LEDs, buttons, card slots (Page 33).

You will find the pinning of the terminal blocks and the connector plans in the section Connecting up the RTU (Page 53).

You will find the electrical data of the connectors in the section Technical data (Page 207).

You configure the power supply of the RTU itself and the control outputs of the RTU in the WBM, refer to the section Power supply (Page 114).

Note

Output voltage

The voltage at the terminals X10, X11, X40 and X42 of the RTU can be set in the WBM for all control outputs to 12 or 24 VDC.

Maximum cable lengths:

The maximum length of all cables connected to the RTU is 30 m.

Design of the connectors as plug-in terminals

The connectors are designed as plug-in screw terminals located side by side on the top and bottom of the device. By removing the terminals you can wire the individual connectors even when there is little space and then plug them in again even if the device is already in a protective housing.

Reverse polarity protection

All terminals are designed so that they can only be plugged into one position. This provides constructional reverse polarity protection.

The connector X10 IN to the external power supply of the RTU also has electronic reverse polarity protection.

X10: Voltage input of the RTU and control output for actuators and sensors

X10 is a connector with a 5-pin terminal.

- X10 IN

  The RTU is supplied with an external voltage via the connector X10 IN. Voltage sources with a voltage range of 12 to 24 VDC are possible.

  Note

  Safety extra-low voltages (SELV)

  The RTU may only be supplied with safety extra-low voltage (SELV) with limited power (Limited Power Source, LPS) according to IEC 60950-1 / EN 60950-1 / VDE 0805-1 or the power supply unit for supplying the device must comply with NEC Class 2 according to National Electrical Code (r) (ANSI / NFPA 70).

  If you use battery modules at the same time as an external voltage source, the RTU switches from battery operation to the external voltage supply as soon as there is an adequate voltage at X10 IN.

- X10 CTRL

  X10 CTRL can be configured using the WBM as a 12/24 V control output to supply sensors and switches of actuators connected to the RTU The voltage value for X10 and X11 (12 or 24 V) can be configured.

  X10 CTRL is regulated; in other words the voltage is independent of X10 IN. Voltage fluctuations of the external power supply are not passed on to X10 CTRL.

  X10 is not designed for the power supply of powerful actuators. Remember the maximum permitted power in the section Technical data (Page 207).

X11: Output for controlling and supplying sensors and switches

X11 is an output for controlling and supplying sensors and switches of actuators connected to the RTU. X11 can be configured in the WBM as a 12/24 V control output for supplying sensors and switches of actuators. The voltage value for X10 and X11 (12 or 24 V) can be configured.

X11 is a regulated control output with a two pin terminal. On X11, voltage is only applied during the update cycles and only when this is configured.

X11 is not designed for the power supply of powerful actuators. Remember the maximum permitted power in the section Technical data (Page 207).

Configuring the inputs / outputs

The individual connectors X20... / X30... / X40... are activated and configured in the WBM (active / not active):

- X20 .. X23: 8 digital inputs

  The first two inputs (DI0, DI1) can be configured as counter inputs.
- X30 .. X31: 4 digital outputs
- X40 .. X43: 4 analog inputs

The input and output properties such as signal type, measuring range etc. are configured in the WBM.

X20 .. X23: Digital inputs / counter inputs

The eight connectors X20 .. X23 are intended for the two signal wires of the sensors. The sensors can be supplied with voltage via the connectors X10 or X11 of the RTU.

The digital inputs are designed as Schmitt trigger inputs with a pull-up resistor. They can be switched via open drain transistors, relays or switches.

When closed, no current is used at the inputs. This means that the current consumption of the RTU does not depend on whether sensors with NO or NC contacts are connected.

The two inputs DI0 and DI1 can be configured alternatively as counter inputs (max. 5 MHz).

X30 .. X31: Digital outputs

The four connectors are intended for the two signal wires of the control inputs of actuators. When necessary, actuators can be supplied with voltage via the control outputs X10 or X11 of the RTU.

The digital outputs are designed as bistable relays that retain their current status even in the sleep mode of the RTU.. In the open status, no current flows by the two terminals of the individual outputs.

X40 .. X43: Analog inputs

Up to four analog sensors can be connected.

The RTU supports the following output signals:

- Current / voltage (measuring transducer with auxiliary power)
  - 0/4 ... 20 mA
  - 0 ... 10 V
  - 0 ... 5 V
- Temperature, Pt1000 (sensor sensor in 2-wire technology)

  -80 ... +140 °C / -112 .. +284 °F

  The cable resistances can be specified in the WBM to correct the temperature measured values. As an alternative, the cable resistances can be calculated on the RTU by specifying specific table data.

The signal types of the inputs are configured in the WBM of the RTU.

The inputs X41/0 and X41/1 measure at the same time, the inputs X43/0 and X43/1 following this and one after the other. Refer to the notes in section Analog inputs (Page 125).

The input AI0 can also be monitored for changes in sleep mode.

X1P1: Ethernet interface

X1P1 is the LAN connector of the RTU. It is only intended for connection to the configuration PC.

The LAN connector is not suitable for direct connection of the RTU to a DNP3 or IEC network.

XR1A1 R: Antenna connector

An antenna is connected to the SMA socket if communication via the mobile wireless network is intended.

X12BATTERY: Connector for battery module (on the side)

Here, you connect one or two optional battery modules.

2.4 The button "WKUP/RESET"

Functions of the button

The "WKUP/RESET" button has the following functions:

- **Set the RTU to the** service mode

  Setting the RTU to the service mode activates the LEDs and the LAN interface "X1P1".

  For a period that can be configured in the WBM, the connection of a configuration computer to the LAN interface and the call of the WBM are therefore enabled. This allows the configuration of the RTU to be changed locally during operation.

- **Shut down to safe status**

  When it shuts down to a safe status the RTU books out of the mobile wireless network and completes all writes to the SD card.

  You can then disconnect the device from the power supply. You require shutting down to the safe status for the following situations:

  – Replacing the SIM card
  – Replacing the SD card
  – Replacing a battery when you only use a single battery module and no external power supply.

- **Resetting to factory settings**

  By resetting to factory settings, the RTU is reset to the status as it was delivered from the factory. This deletes most of the configured settings.

  For the precise effects of resetting, refer to the section Resetting to factory settings (Page 203).

Pressing the button

By pressing the button in different ways, the functions described above are triggered:

Duration of pressing the button (seonds)	Function
0 .. < 5 s	**Wake up (service mode)** When woken, the LEDs and the LAN interface of the RTU are activated.
> 5 .. < 10 s	**Shut down to safe status** When it shuts down to a safe status the RTU books out of the mobile wireless network and completes all writes to the SD card.
≥ 10 s	**Resetting to factory settings** If you press the button continuously, a reset is initiated and the "STATUS" LED flashes green.

2.5 Slots for SIM card and SD card

"◀ SIM": Slot for the SIM card

On the underside of the RTU there is a slot marked "◀ SIM" for the SIM card you obtain from the network provider of your mobile wireless contract

Compatible cards

The card slot and the RTU are compatible with the following card formats:

- Mini SIM card, 25 x 15 mm (ISO/IEC 7810 ID-000)

  If applicable micro SIM card , 15 x 12 mm (ETSI TS 102 221 V9.0.0) if an adapter exists.

Card errors / diagnostics

Card errors are indicated by the "SIM" LED and entries in the diagnostics buffer.

Inserting the card

Inserting the SIM card is described in the section Inserting the SIM card and SD card (Page 47).

"MC▶": Slot for an optional SD card

At the top right on the front of the RTU there is a slot for an SD card marked "MC ▶". You have the option of using the SD card as an exchangeable storage medium for storing configuration and process data (log files) as well as diagnostics data.

An SD card does not ship with the RTU.

Compatible cards

You will find a list of compatible SD cards in the appendix SD card / SMC (Page 224).

Card errors / diagnostics

Card errors are indicated by entries in the diagnostics buffer.

Inserting the card

Inserting the SD is described in the section Inserting the SIM card and SD card (Page 47).

Retentive storage of important data on the SD card

The SD card is an exchangeable storage medium for storing various data safe from power failure.

The following data can be stored on the SD card.

- Configuration data

  The configuration data is backed up on the SD card following every change in a configuration file. Storing configuration data on the card serves the following purposes:

  – Copying configuration data to other RTUs

    The configuration file can be edited and can be used to copy configuration data to different RTUs, refer to the section Configuration (Page 84).

  – Device replacement without configuration PC

    If an RTU needs to be replaced for maintenance purposes, by transferring the SD card from the old to the new RTU, the configuration data can be made available to the new RTU. In this case, you do not need a configuration PC.

- Process data

  If the Logging function is activated in the WBM. process data acquired by the RTU is saved up on the SD card.

  Certain or all process data can be stored on the card for a certain time or until the maximum storage capacity of the SD card is reached.

- Diagnostics buffer entries

  In the WBM you can configure that diagnostics buffer entries for serious events are saved on the SD card.

  The entire diagnostics buffer of the RTU can be saved manually on the SD card.

Connecting up, installation, commissioning 3

3.1 Important notes on using the device

Safety notices on the use of the device

Note the following safety notices when setting up and operating the device and during all associated work such as installation, connecting up or replacing the device.

3.1.1 Notices on use in hazardous areas

WARNING

Safety requirements for installation

The devices are "open equipment" according to the standard IEC 61010-2-201. To fulfill requirements for safe operation with regard to mechanical stability, flame retardation, stability, and shock-hazard protection, the following alternative types of installation are specified:

- Installation in a suitable cabinet.
- Installation in a suitable enclosure.
- Installation in a suitably equipped, enclosed control room.

WARNING

The device may only be operated in an environment with pollution degree 1 or 2 (see IEC 60664-1).

WARNING

EXPLOSION HAZARD

The device must not be opened.

3.1.1.1 Safety extra low voltage

WARNING

Power supply

The equipment is designed for operation with Safety Extra-Low Voltage (SELV) by a Limited Power Source (LPS).

This means that only SELV / LPS complying with IEC 60950-1 / EN 60950-1 / VDE 0805-1 must be connected to the power supply terminals. The power supply unit for the equipment power supply must comply with NEC Class 2, as described by the National Electrical Code (r) (ANSI / NFPA 70).

WARNING

EXPLOSION HAZARD

DO NOT CONNECT OR DISCONNECT EQUIPMENT WHEN A FLAMMABLE OR COMBUSTIBLE ATMOSPHERE IS PRESENT.

WARNING

EXPLOSION HAZARD

SUBSTITUTION OF COMPONENTS MAY IMPAIR SUITABILITY FOR CLASS I, DIVISION 2 OR ZONE 2.

WARNING

When used in hazardous environments corresponding to Class I, Division 2 or Class I, Zone 2, the device must be installed in a cabinet or a suitable enclosure.

3.1.2 Notices on use in hazardous areas according to ATEX / IECEx

WARNING

Requirements for the cabinet

To comply with EC Directive 94/9 (ATEX95) or the conditions of IECEx, this enclosure or cabinet must meet the requirements of at least IP54 in compliance with EN 60529.

WARNING

If the cable or conduit entry point exceeds 70 °C or the branching point of conductors exceeds 80 °C, special precautions must be taken. If the equipment is operated in an air ambient in excess of 50 °C, only use cables with admitted maximum operating temperature of at least 80 °C.

WARNING

Take measures to prevent transient voltage surges of more than 40% of the rated voltage. This is the case if you only operate devices with SELV (safety extra-low voltage).

WARNING

EXPLOSION HAZARD

Do not press the button "WKUP RESET" if there is a potentially explosive atmosphere.

WARNING

DIN rail

In the ATEX and IECEx area of application only the Siemens DIN rail 6ES5 710-8MA11 may be used to mount the RTU and the battery module.

3.1.3 Notices regarding use in hazardous areas according to UL HazLoc

WARNING

EXPLOSION HAZARD

DO NOT DISCONNECT WHILE CIRCUIT IS LIVE UNLESS AREA IS KNOWN TO BE NON-HAZARDOUS.

This equipment is suitable for use in Class I, Division 2, Groups A, B, C and D or non-hazardous locations only.

This equipment is suitable for use in Class I, Zone 2, Group IIC or non-hazardous locations only.

3.2 Requirements for commissioning

Prior to commissioning

The following requirements must be met before you commission the RTU:

- **Configuring the RTU**

  For the communication of the RTU with a configuration computer via the LAN interface, you need to set the interface of the configuration computer according to the subnet parameters of the RTU, refer to section LAN (Page 92). As an alternative, you can activate the DHCP functionality of the RTU on the WBM page "LAN".

- **Formatted SD card (optional)**

  If you want to use an SD card, make sure that the card is correctly formatted, see also the section SD card / using and formatting SMC (Page 47).

Requirements for using mobile wireless services

- **Configuring the RTU**

  For the communication of the RTU with a master station via mobile wireless at least the following parameters must be configured:

  – Activation of the mobile wireless interface with suitable parameters on the WBM page "WAN".

  – Configuration of the protocol-specific parameter on the WBM page "Telecontrol".

  – If you use communication via the DNP3 or IEC protocol, an OpenVPN server must exist and the RTU must be configured accordingly, refer to the WBM page "OpenVPN client".

- **Mobile wireless contract**

  You require a suitable contract with a mobile wireless network provider, refer to the section Scope of delivery, accessories, requirements (Page 25).

- **Plugged-in SIM card**

  The SIM card belonging to the mobile wireless contract is plugged into the RTU.

  When possible, insert the SIM card in the RTU prior to mounting and connecting up, see section Inserting the SIM card and SD card (Page 47).

  With contracts with a PIN, the PIN must be configured, refer to the section Mobile wireless settings (Page 94).

- **Locally available mobile wireless network**

  Make sure that a configured mobile wireless network is available in the area of the station, refer to the section Mobile wireless settings (Page 94).

See also

Operating modes (Page 110)

3.3 SD card / using and formatting SMC

Formats of the memory cards

If you want to use a card as an exchangeable storage medium, the formatting must meet the requirements of the RTU:

- **SIMATIC Memory Card (SMC)**

  Directly from the factory an SMC is already correctly formatted and can be used in the RTU without any further preparation.

- **Standard SD card**

  File format FAT32

Using an SMC in a card reader

If you use an SMC in a commercially available card reader under Windows, the card must always be disabled using the "Eject" or "Safely remove hardware" function before you take the card from the card reader. Otherwise loss of data may result.

Formatting an SD card or SMC

When formatting an SD card or an SMC that has already been used, note that all the data on the card is deleted when you format.

- **Formatting a standard SD card**

  If the card is not formatted in the file format FAT32, format the card as described in the manual of the card or the card reader.

- **Use of an SMC**

  An SMC must not be formatted like an SD card otherwise it can be used. You will find instructions on repairing and formatting on the pages of the Siemens Industry Online Support in the following FAQ:

  Link: (http://support.automation.siemens.com/WW/view/en/69063974)

3.4 Inserting the SIM card and SD card

Inserting the SIM card

Recommendation: Insert the SIM card in the RTU before you install it. After installing and connecting up the answer you, the space for inserting the SIM card may be very restricted.

Before inserting or changing the SIM card make sure that the power supply is turned off.

Step	Execution	Notes and explanations
①	Release the slide for the SIM card on the bottom of the RTU by gently pressing the release pin beside the slot "◀ SIM".	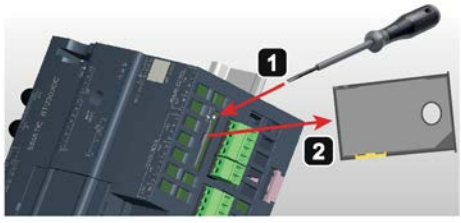
②	Remove the slide from the housing.	
③	Insert the SIM card in the slide as illustrated.	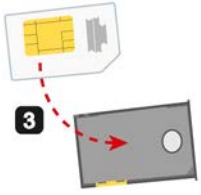
④	Push the slide back into the housing, where it locks gently in place.	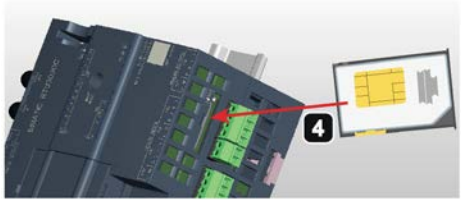

Removing the SIM card

Note

Pulling the SIM card

Do not remove the SIM card while the device is operating. First shut the RTU down to the safe status, refer to the section Operating status (Page 89).

Remove the SIM card as described above.

Inserting an SD card

If you use an SD card (optional), make sure that it is correctly formatted.. For information on formatting refer to the section SD card / using and formatting SMC (Page 47).

Before inserting the SD card make sure that the power supply is turned off.

Insert the card in the slot "MC▶" until it locks gently in place. Make sure that the card is in the correct position.

Removing the SD card

Note

Pulling the SIM card

Do not remove the SD card while the device is operating. First shut the RTU down to the safe status, refer to the section Operating status (Page 89).

With slight pressure on an inserted card, you release this again from the locking mechanism in the slot.

3.5 Installing an RTU

Prior to installation

Refer to the information in the section Requirements for commissioning (Page 46) before you start to install the RTU.

You will find the device dimensional is in the section Dimension drawings (Page 219).

Installation location

NOTICE
Installation location - Dependency of the temperature range The module must be installed so that its upper and lower ventilation slits are not covered, allowing adequate ventilation. Above and below the device, there must be a clearance of 25 mm to allow air to circulate and prevent overheating. Remember that the permitted temperature ranges depend on the position of the installed device. You will find the permitted temperature ranges in the section Technical data (Page 207).

Installation of the rack	Installation position of the RTU
Horizontal installation of the rack (DIN rail)	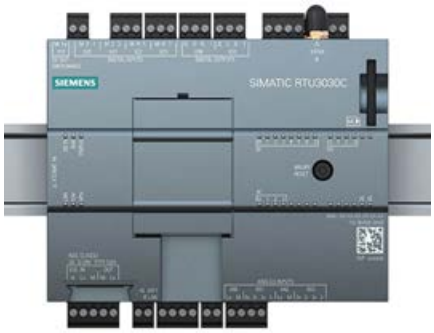
Vertical installation of the rack (DIN rail)	

Installing the RTU

- If you are not using battery modules, go to step 3.
- If you use a battery module, start at step 1.

Table 3- 1 Procedure for installation

Step	Execution	Notes and explanations
1	Take off the covers on the left-hand side of the RTU - and when using two battery modules - on the left-hand side of the first battery module: 1. Insert the tip of a slotted screwdriver in the gap above the cover. 2. Lever the cover carefully out of its holder. 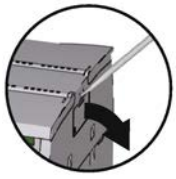 3. If you use two battery modules, plug the modules together using the side contacts. Do not yet connect the battery modules to the RTU.	Recommendation: Store the covers in a safe place in case they need to be used later.
2	Secure the DIN rail in the protective housing.	Use a 35 mm DIN rail.
3	Push in the upper DIN rail clips on the back of the RTU (and, if applicable, of the battery modules) , until they lock in place.	
4	Hang the RTU on the DIN rail.	
5	Push the battery modules (left) and RTU (right) together carefully until the side contacts between the RTU and battery module are fully closed.	
6	Bringing the lower DIN rail clips into the locked position.	
7	Press the RTU onto the DIN rail until the DIN rail clips, are locked in place.	

Note

Protecting the battery modules from slipping on the DIN rail

When mounting in the protective housing that can be ordered as an accessory, there are two end retainers that are fitted to both ends of the group of devices. The end retainers prevent the RTU and battery module from separating under mechanical load.

If you do not mount the RTU or the battery modules in a protective housing from the accessories program, prevent the battery module from slipping with a suitable clamping device, e.g. a Siemens end retainer 8WA1808.

When using the device in the areas of application ATEX or IECEx, note the information on the DIN rai in section Notices on use in hazardous areas according to ATEX / IECEx (Page 44).l

3.6 Grounding and overvoltage protection

Ground/chassis ground concept

Do not ground the RTU using the grounding terminal X10.

Instead ground the outer housing at the connector intended for this. Ground the housing with a maximum of 1 ohm resistance from the grounding terminal of the RTU to ground.

⚠ CAUTION
Grounding by trained specialist personnel Have trained specialist personnel create a grounding and chassis ground concept. Only allow trained specialist personnel to perform the ground connection on the system. Keep to the local regulations and those that apply to the system. However it is installed, the housing of the RTU must be grounded to comply with the local electrotechnical regulations that apply in the relevant country. The most effective grounding method is a direct connection to ground with minimum resistance.

Overvoltage protection

NOTICE
Protection of the RTU and the system Via cables, leaving the RTU, the coupling in of strong electromagnetic pulses on the supply cables is possible, for example, resulting from lightning strikes. The connectors of the RTU are not protected against strong electromagnetic pulses. For this, external overvoltage protection modules are required. Have trained specialist personnel create and overvoltage concept that meets the electrotechnical regulations in the relevant country.

Cables at risk

The RTU is at risk via the following cables:

- The supply cables of the optional external power supply of the RTU.
- All signal cables and cables to the power supply of sensors, switches and other devices connected to the RTU.
- The antenna cable. If the antenna is installed outside the protective housing of the RTU.

Protection with overvoltage protection modules

The overvoltage protection modules listed in the appendix or technically equivalent modules, provide additional protection against overvoltage, refer to the section Overvoltage protection modules (Page 232).

3.7 Connecting up the RTU

Description of the connectors and technical specifications

For a description connectors and connectable devices, refer to the section Interfaces and connectors (Page 37).

You will find the terminal sizes, maximum torque and technical details of the connectors in the section Technical data (Page 207).

Order of the work

Note

Connection only with power off

1. First wire all the connectors of the RTU.
2. Turn the power supply on only after the RTU has been completely wired and connected.

Connecting the antenna (XR1A1)

If you use communication via mobile wireless, connect the antenna to the SMA socket of the RTU.

Protect the antenna connector with a suitable overvoltage protection module if you install the antenna outdoors. See section Grounding and overvoltage protection (Page 52) for information on this.

An antenna cable is not supplied with the device. You will find the compatible antenna in the appendix Antenna ANT794-4MR (Page 225).

Connecting up the digital inputs X20 ... X23

You can connect two sensors to each of the 4 terminal blocks of the digital inputs. In total, up to 8 sensors can be connected.

Assignment of the contacts based on the example of terminal block X20 for digital outputs 0 and 1:

- **M** Reference potential for inputs 0 and 1
- **0** Input 0
- **1** Input 1

The terminal blocks X21 .. X23 are assigned accordingly, for digital inputs 2...7.

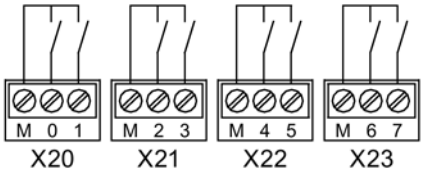

Figure 3-1 Wiring of digital inputs X20 ... X23

For the power supply of the sensors, you can use the control outputs X10 or X11 of the RTU.

Connecting the digital outputs X30 ... X31

The outputs are designed as relays that switch through the signal of the relevant connector 0 / 1 / 2 / 3 (reference potential) to the output 0L / 1L / 2L / 3L.

The terminals 0 / 1 / 2 / 3 can be supplied with voltage via the control outputs X10/X11 of the RTU if this is configured. You specify the voltage value of control outputs X10/X11 in the WBM ("Operating mode" > "Power supply") for the outputs X10, X11, X40 and X42 together.

You can connect two actuators to each of the two terminal blocks of the digital outputs. In total, up to 4 actuators can be connected.

Assignment of the contacts based on the example of terminal block X30 for digital outputs 0 and 1:

- **0L / 0** Output 0
- **1L** / 1 Output 1

Terminal block X31 is assigned accordingly, for digital outputs 2+3.

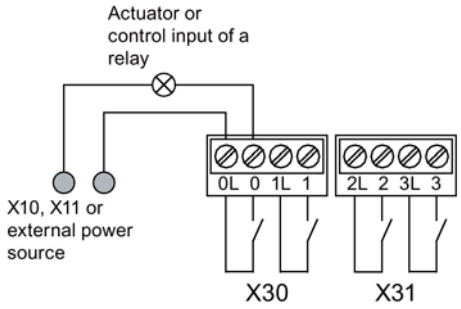

Figure 3-2 Wiring of digital outputs X30 ... X31

For the power supply of the connected actuators, you can use the control outputs X10 or X11 of the RTU.

Connecting up the analog inputs X40 ... X43

You can connect up to 4 analog measuring transducers to the RTU.

The terminal blocks X40 and X42 each serve to control and supply 2 sensors. You specify the voltage value (12 or 24 V) in the WBM ("Operating mode" > "Power supply").

The terminal blocks X41 and X43 are each used to connect the signal wires of two sensors.

Assignment of the contacts based on the example of terminal block X40 and X41:

- **X40**
  - **L+** Control output output for sensors 0 and 1
  - **M** Ground for sensors 0 and 1
- **X41**
  - **0+** Input "+" of sensor 0
  - **0-** Input "-" of sensor 0
  - **1+** Input "+" of sensor 1
  - **1-** Input "-" of sensor 1

The terminal blocks X42 and X 43 are assigned accordingly for sensors 2 and 3.

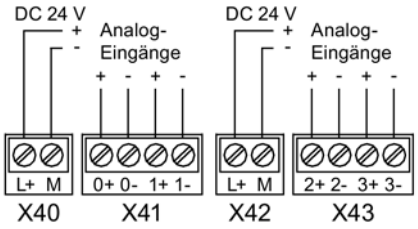

Figure 3-3 Wiring of analog outputs X40 ... X43

Depending on the measuring transducer type, make the connections as shown below.

As an example the figures show the connection of a measuring transducer at terminal block X41 (analog input "0").

Connecting a 2-wire measuring transducer

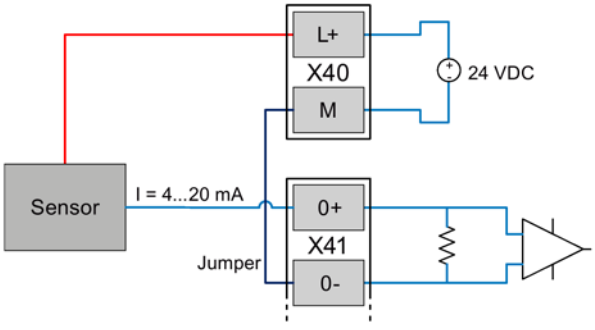

Figure 3-4 Connecting a 2-wire measuring transducer

Terminal "M" of the terminal block X40 and terminal "0-" of terminal block X41 need to be bridged.

Connecting a 3-wire measuring transducer

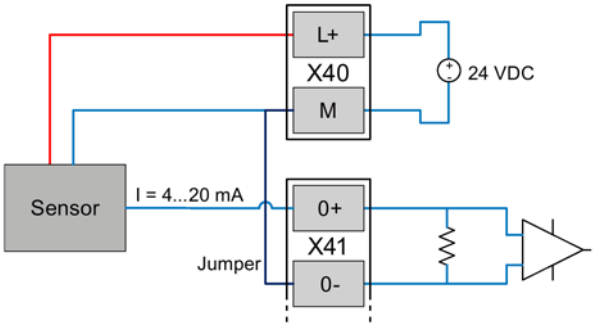

Figure 3-5 Connecting a 3-wire measuring transducer

The terminal "M" of the terminal block X40 and terminal "0-" of terminal block X41 need to be bridged.

Connecting a 3-wire measuring transducer with external power supply

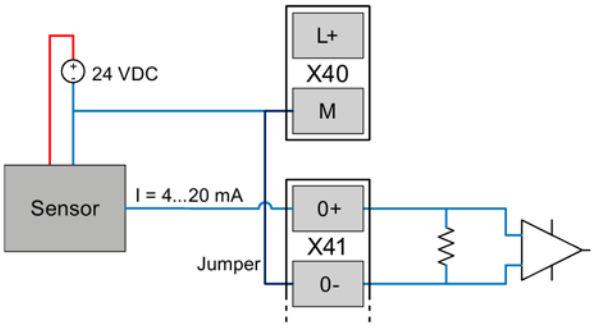

Figure 3-6 Connecting a 3-wire measuring transducer with external power supply

The terminal "M" of the terminal block X40 and terminal "0-" of terminal block X41 need to be bridged.

Connecting a 4-wire measuring transducer

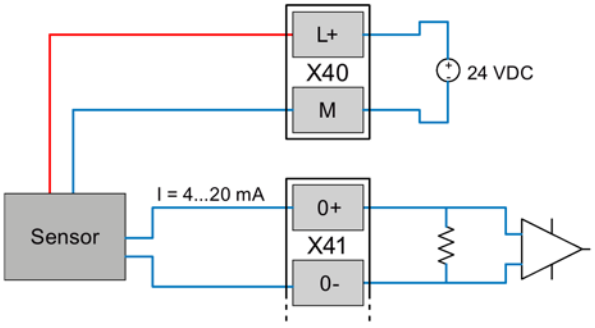

Figure 3-7 Connecting a 4-wire measuring transducer

Connecting a 4-wire measuring transducer with external power supply

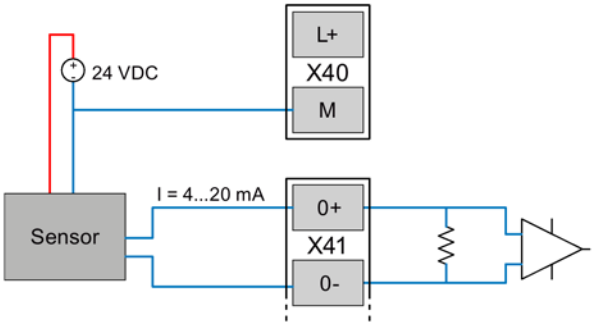

Figure 3-8 Connecting a 4-wire measuring transducer with external power supply

Connecting a temperature sensor

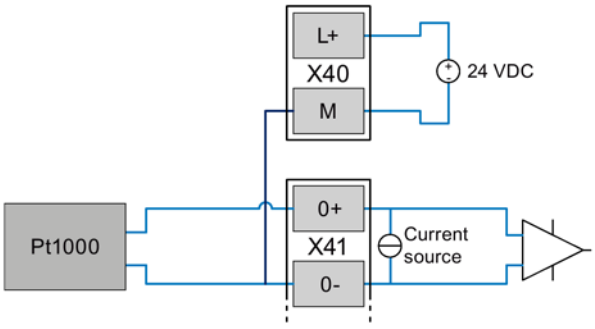

Figure 3-9 Connecting a temperature sensor

Connecting the 12/24 V control output X11 to sensors and switches

Connect the power supply for sensors and/or switches to terminal block X11.

- **M** Reference potential
- **L+** Voltage 12/24 VDC

This connector is not suitable for the power supply of powerful actuators. Note the maximum power consumption in the section Technical data (Page 207).

You specify the voltage value (12 or 24 V) in the WBM ("Operating mode" > "Power supply").

Connecting the 12/24 V control output X10 to sensors and switches

To supply sensors, actuators and switches of actuators connected to the RTU, you can connect these to the control output X10 CTRL.

- X10 CTRL
  - **L+** Voltage 12/24 VDC

    You specify the voltage value (12 or 24 V) in the WBM ("Operating mode" > "Power supply").
  - **M** Reference potential

Connecting the external power supply X10 IN

Finally connect the external power supply (voltage input) of the RTU to terminal block X10 IN.

Only connect safety extra-low voltages (SELV), refer to the section Interfaces and connectors (Page 37).

- X10 IN
  - ⏚ Functional ground

    Do not use the functional ground for grounding the RTU. For grounding the system, refer to the section Grounding and overvoltage protection (Page 52).
  - L+ Voltage input 18.8 ... 28.8 VDC
  - M Reference potential

Note the maximum power consumption in the section Technical data (Page 207).

3.8 Commissioning and starting up the RTU

Note

Startup with an SD card that is not brand new

If the RTU starts up with an SD card that is not brand new, observe the behavior of the RTU in terms of the configuration file used, refer to the section Configuration (Page 84).

Requirements for commissioning

Prior to commissioning the RTU, make sure that the following conditions are met:

- The system is completely installed:

  RTU, protective housing, relevant sensors/actuators, if applicable antenna, if applicable external power supply
- The RTU and the sensors/actuators belonging to it are completely wired.
- The communications partner - if configured - is reachable.
- The configuration data is loaded on the RTU.

  Note

  Copying the configuration data to other RTUs

  If you install a lot of RTUs which use a lot of identical configuration data, you can transfer the configuration data of one RTU to the other RTUs using the configuration file. For information on this refer to the WBM > "Maintenance".

- When mobile wireless communication is intended: The SIM card is plugged in.
- When logging of the process data is intended: The SD card is plugged in.
- The power supply is not yet turned on or connected.

Note

Connecting the power supply:

- With power supply via battery modules:
  The battery modules are not yet connected to the RTU.
- With external power supply
  The external power supply is connected, but not yet turned on.

See also section Requirements for commissioning (Page 46).

Commissioning the RTU

Commission the RTU by supplying the RTU with voltage. The startup behavior of the RTU is described below.

Depending on the type of power supply, follow the steps below:

Supply of the RTU only via external power supply

Turn on the external power supply.

The RTU starts up.

Supply of the RTU only via battery modules

Connect the battery modules to the RTU. For the procedure, refer to the section Installing an RTU (Page 49)

The RTU starts up.

Supply of the RTU via battery modules and external power supply

1. Connect the battery modules to the RTU. For the procedure, refer to the section Installing an RTU (Page 49)

   The RTU starts up.
2. Turn on the external power supply.

   The RTU changes from battery operation to external power supply.

Startup behavior of the RTU

During startup the RTU behaves as follows:

- The LED "STATUS" flashes green.
- If an SD card is plugged in, the RTU searches for the configuration data stored on the card.
  - When it has found the configuration data on the card, the RTU reads in the configuration data.
  - If the configuration data is not found on the card, the RTU uses the configuration data in its internal memory.

    If the RTU does not find any configuration data in its internal memory it remains in service mode. The STATUS LED flashes red.
- The RTU changes to update mode:
  - All connected and configured inputs are read.
  - The read data is processed if programmed.
  - The data is saved.
  - The outputs are updated if programmed.
- If communication is configured and the requirements for data transfer are met, the RTU connects to its communications partner for the first time.

  The following requirements must be met:
  - The inputs are configured, refer to the section Tags (Page 118).
  - The tags are processed by the program, refer to the section Programming (Page 157).
  - The data points have been created, refer to the section Telecontrol (Page 139).
  - The RTU has a connection to the mobile wireless network, refer to the section LEDs (Page 34) (wireless status LEDs).
- When the data transfer is complete, or if no communication is configured, the RTU changes to sleep mode.

Checking the antenna position

If the RTU is in communication mode, based on the signal strength displayed in the WBM, you can check the optimum alignment of the antenna in different positions. For more on the display of the signal strength refer to the section Wireless cell (Page 97).

Configuration (WBM) 4

4.1 Range of functions of the WBM

Web Based Management (WBM)

The RTU is configured using the Web Based Management (WBM) of the RTU.

The WBM consists of integrated Web pages of the RTU that can be called up in the Web browser of a connected configuration PC.

Overview of the functions of the WBM

With the WBM, the following functions are available to you:

User management

Via HTTP you connect to the RTU from a configuration PC.

In the open WBM of the RTU, you specify individual users that may access the WBM of the RTU with a user name and password.

Configuration functions

Using the WBM, configure the following functions of the RTU:

- Device-internal functions, such as the time of day or IP address
- Settings of the operating modes of the RTU
- Inputs and outputs of the sensors and actuators connected to the RTU
- Communications functions of the RTU
- Logging of system events

Programming the program blocks for the controller

In the WBM, you program the program blocks for the control tasks of the RTU using a graphic user interface.

Maintenance functions

- Loading and storing the configuration data
- Downloading new firmware versions
- Resetting the RTU to the factory settings

Diagnostics

- Viewing, reading out or saving the diagnostics messages in the diagnostics buffer
- Sending messages (SMS, e-mails) for configurable events

Saving and re-using the configuration file

The configuration data you create in the WBM is saved on the RTU.

If you want to back up the data as well, you can also save the configuration data in the WBM area. "Maintenance" on the configuration PC or on a plugged in SD card, refer to the section Configuration (Page 84).

If you install a lot of RTUs which use a lot of identical configuration data, you can transfer the configuration file of one RTU to the other RTUs and adapt it there.

First access to the WBM

The first time you call up the WBM, you need to establish the connection between the configuration PC and RTU initially via the LAN interface of the RTU, refer to the section User data for the first login to the WBM (Page 71).

When you have configured the required data of the WAN interface, you can also access the RTU later via the mobile wireless network.

4.2 General functions of the WBM

Symbols of the title bar

The symbols in the title bar have the following significance:

Symbol	Function
2015-01-28 14:30:37	Date and time of the last page update of the WBM in the local time of the RTU (yyyy-mm-dd hh:mm:ss)
English	Drop-down list for setting the WBM language
User: 1	Name of the currently logged in user
Log out	Logout of the user
Number of active sessions: 1	Number of connections to configuration PCs
Start	Execution of the user program is turned off. Program execution is started by clicking on the text.
Stop	Execution of the user program is turned on. Program execution is stopped by clicking on the text.
	The automatic update of the WBM display is enabled. The data is called up at 5 second intervals.
	The automatic update of the WBM display is disabled.
Turn on	Switches on the automatic update of the WBM display.
Turn off	Switches off the automatic update of the WBM display.

Symbol	Function
	Prints out the current WBM page
	Opens the Internet page of the RTU in the Siemens Industry Online Portal. Here, you will find all entries for the product.
	Open / save Open Source software license conditions of the RTU

Entering and saving

Confirm all your entries by clicking the "Apply" button. Your settings are then adopted by the device. With some parameters this can take a few seconds.

Grayed out boxes are preset by the system and cannot be changed.

Note

Data loss when changing the WBM page without saving

If you do not save your input with the "Apply" button, your input will be discarded without a prompt for confirmation when you change WBM pages.

Incorrect entries in the configuration

In many input boxes of the WBM, the content is checked for missing content or consistency when you save. Boxes with detected errors or illegal characters are marked with a red border.

192.168.0.999

Figure 4-1 Example of an input box with a detected incorrect entry

With some incorrect entries an additional message is also displayed. The settings are only applied after the error has been corrected.

4.3 String lengths and permitted characters

Note

Leading and following spaces

Leading and following spaces are not permitted. These result in an error message in the WBM indicating an incorrect entry.

Exception: Comments and SMS message texts.

Use of special characters

When using special characters, the maximum character length cannot be guaranteed.

When configuring user data, passwords, device parameters etc. ASCII character sets are often specified. Below you will find ASCII character sets with their hexadecimal code and the corresponding character.

Standard characters

- **0x30 .. 0x39**

  0 1 2 3 4 5 6 7 8 9

- **0x41 .. 0x5A**

  A B C D E F G H I J KL M N O P Q R S T U V W X Y Z

- **0x61 .. 0x7A**

  a b c d e f g h i j k l m n o p q r s t u v w x y z

Special characters

- **0x21 .. 0x2F**

  ! " # $ % & ' ( ) * + , - . /

- **0x3A .. 0x40**

  : ; < = > ? @

- **0x5B .. 0x60**

  [\ ] ^ _ `

- **0x7B .. 0x7E**

  { | } ~

Special characters ≥ 0x80

- **0x80, 0xA3, 0x8A, 0x9A, 0x8E, 0x9E, 0xB5**

  € £ Š š Ž ž µ

- **0xC0 .. 0xFF**

  À Á Â Ã Ä Å Æ Ç È É Ê Ë Ì Í Î Ï Ð Ñ Ò Ó Ô Õ Ö × Ø Ù Ú Û Ü Ý Þ ß à á â ã ä å æ ç è é ê ë ì í î ï ð ñ ò ó ô õ ö ÷ ø ù ú û ü ý þ ÿ

Table 4- 1 **Characters and formats of the strings that can be entered in the WBM**

Parameter	String length		Permitted characters / format
	Min.	Max.	
Names (except for server names)	1	20	All the characters listed above
System			
Station name	1	20	Combination of: • 0x30 .. 0x39 • 0x41 .. 0x5A • 0x61 .. 0x7A (no digits alone)
Station description	1	20	All the characters listed above
NTP server name	1	63	Standard characters, period, dash (DNS name according to RFC 1035 and RFC 1123): • 0x30 .. 0x39 • 0x41 .. 0x5A • 0x61 .. 0x7A • 0x2D • 0x2E
WAN			
PIN	4	8	0x30 .. 0x39
APN	1	63	Standard characters and period (DNS name according to RFC 1035 and RFC 1123): • 0x30 .. 0x39 • 0x41 .. 0x5A • 0x61 .. 0x7A • 0x2E
APN user name, password	0 0	20 20	• 0x30 .. 0x39 • 0x41 .. 0x5A • 0x61 .. 0x7A • 0x21 .. 0x2F • 0x3A .. 0x40 • 0x5B .. 0x60 • 0x7B .. 0x7E

Parameter	String length		Permitted characters / format
	Min.	Max.	
Users / groups			
Phone numbers	0	20	Format: +<country code><target phone number> Entry as digits and few special characters • 0x22 ... 0x7E • 0x2B (Plus character: Placeholder for the trunk prefix before the country code) • 0x2A (asterisk at the end: Placeholder for extension numbers) • 0x2F, 0x28, 0x29 (/ ( ) as the delimiter) • 0x32 (Space)
User name, group name	1	20	All the characters listed above
Companydepart-ment/position, group descrip-tion	1	42	All the characters listed above
Password	8	20	• 0x30 .. 0x39 • 0x41 .. 0x5A • 0x61 .. 0x7A • 0x21 .. 0x2F • 0x3A .. 0x40 • 0x5B .. 0x60 • 0x7B .. 0x7E
Tags and program blocks			
Data point name	1	20	Standard characters + special characters (< 0x80) with the following exceptions. The following are not permitted: • 0x27 (') • 0x2E (.) • 0x2F (/) • 0x5B ([ ) • 0x5D ( ]) • 0x5C (\ ) • 0x7C (|)
Tag names / network names	1	20	All the characters listed above
Comments on networks and program blocks	1	20	All the characters listed above
Telecontrol			
Telecontrol password	8	29	All the characters listed above (standard characters + special characters < 0x80)

Parameter	String length		Permitted characters / format
	Min.	Max.	
Messages			
Message texts including up to 6 placeholders for process values with formatting instructions. The placeholders in the message are replaced by the current value.	0	160	• 0x30 .. 0x39 • 0x41 .. 0x5A • 0x61 .. 0x7A • 0x21 .. 0x2F • 0x3A .. 0x40 • Umlauts (ä, ü etc) and ß: 0xC4, 0xE4, 0xD6, 0xF6, 0xDC, 0xFC, 0xDF Square brackets (0x5B, 0x5D) are reserved for placeholders. The following formats are permitted for placeholders: • [V] Decimal value of a tag. V is the placeholder for the tag name. Signal names must not contain square brackets (0x5b, 0x5D). • [DATE] Current date. Format: yyyy-mm-dd • [TIME] Current time. Format: hh:mm:ss • [V.T] or [V.T2] Placeholder for a numeric value that is output as a period of time. • [DEVNAME] Placeholder for own station name

4.4 Establishing the connection between RTU and configuration PC

4.4.1 Address data of the RTU

Address data of the RTU

To connect to the WBM of the RTU from the configuration PC, you require the address data of the RTU.

In the factory the following address data is set as default for the RTU:

Address data	Subnet mask
Default host name of the RTU	simatic.rtu
Default IP address of the RTU	192.168.0.3
Default subnet mask	255.255.255.0

4.4.2 Establishing a connection to the WBM of the RTU

Using the HTTP protocol

You can establish a connection between the configuration PC and RTU using the HTTP protocol:

- LAN connection

  With a local connection from the configuration PC to the RTU you can connect directly. If the RTU is in sleep mode, you need to change it to service mode by briefly pressing the button.

- Connection via WAN (Internet/mobile wireless)

  With HTTP connections via the Internet / mobile wireless network you need to use the security protocol "OpenVPN", refer to the next section.

  When no OpenVPN server exists and is configured, no HTTP connection between the PC and RTU is established via the WAN. In this case no message is output when there are unsuccessful connection attempts.

For the connection of a service PC to the RTU via the Web server of TCSB no OpenVPN is required.

OpenVPN for HTTP connections from the configuration PC to the RTU via WAN

If you want to establish an HTTP connection to the WBM of the RTU from your configuration PC via mobile wireless, you need to use OpenVPN. This requires the following:

- A configured OpenVPN server
  - First set up an OpenVPN server.

    "SINEMA Remote Connect - Server", Is recommended, see /5/ (Page 234).
  - Configure the OpenVPN clients you require in the VPN network (configuration PC, RTUs).
- Installed OpenVPN client on the configuration PC
  - Install an open VPN client on the configuration PC.

    If you use "SINEMA Remote Connect - Server" as the server, you can use the "SINEMA Remote Connect - Client" application for the PC, see /6/ (Page 234). You will find a Getting Started for the server and client in /7/ (Page 235).
  - Before establishing the connection to the RTU, you need to connect the OpenVPN client of the PC to the OpenVPN server.
- Installed OpenVPN client on the configuration PC
  - Install the OpenVPN client of the RTU, see section OpenVPN client (Page 101).
  - Imported certificates on the RTU

    So that the RTU can be located in the VPN network, the certificates created on the OpenVPN server need to be exported and imported in the WBM of the RTU via a LAN connection.

The VPN connection is established from the configuration PC via the VPN server to the RTU.

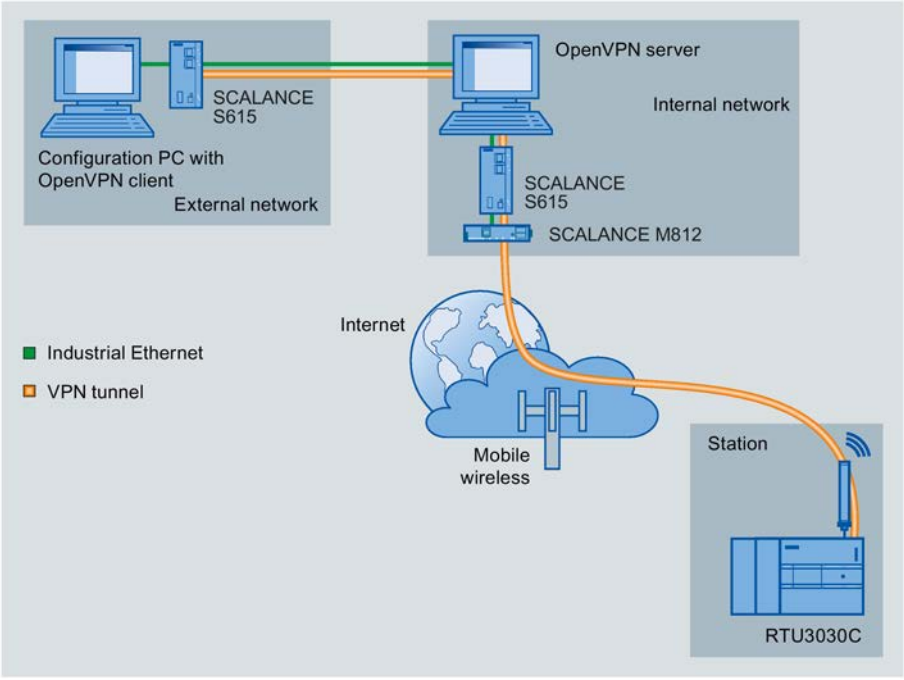

Figure 4-2 Connection between the configuration PC and RTU via WAN using OpenVPN

Preparing the PC interface

Follow the steps below to prepare the interface of the configuration PC for the connection to the RTU.

1. Open the Control Panel of the PC with the menu command "Start" > "Control Panel".
2. Click on the "Network and Sharing Center" group.
3. At the top left in the Network and Sharing Center , click on the entry "Change adapter settings".
4. Select the entry for the LAN connection and from the shortcut menu (right mouse button) select the menu command "Properties" (as administrator).
5. In the properties dialog of the LAN connection, select the entry "Internet protocol version 4 (TCP/IPv4)" in the "Network" tab.

6. Click "Properties".

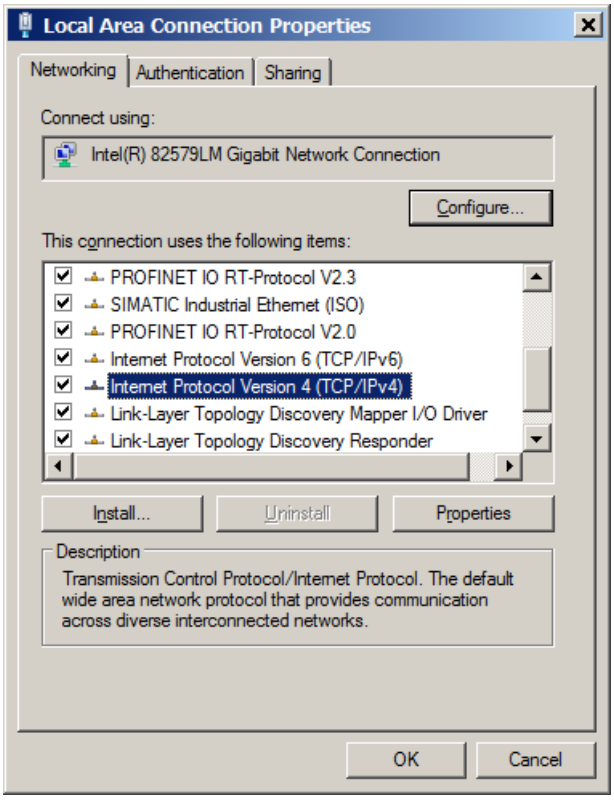

In the properties dialog that opens, the settings depend on whether you have activated the DHCP server of the RTU, refer to section LAN (Page 92).

Setting when the DHCP server of the RTU is activated

1. Select the option to obtain the IP address automatically..
2. Select the option to obtain the address of the DNS server automatically.
3. Confirm the dialogs with "OK" and close the Control Panel.

This is the more convenient setting. During connection establishment, the RTU assigns an IP address to the configuration PC via its DHCP server.

Setting when the DHCP server of the RTU is deactivated

1. Select the option to assign an IP address.
2. Enter the following values:
   - IP address: 192.168.0.4
   - Subnet mask: 255.255.255.0

   The address of the PC must be located in the subnet of the LAN interface of the RTU.
3. Confirm the dialogs with "OK" and close the Control Panel.

Establishing a connection to the RTU

1. Connect the configuration PC.
   - With a LAN connection: Connection to connector X1P1 of the turned on RTU

     Continue at point 3.
   - With a WAN connection: Connection to the router connected to the Internet

     Continue at point 2.
2. Only with WAN connection: Start the OpenVPN client and connect to the OpenVPN server.
3. Call up the Web browser on the configuration PC.
4. Enter the address (IP address or host name) in the address line of the Web browser:

   http://<Address>

   The factory default is:
   - IP address: 192.168.0.3
   - Host name: simatic.rtu
5. Press the Enter key.

   In some situations when you log in a warning message is displayed indicating that the Web page is unsafe or that the certificate is not trustworthy. If you are sure that you have entered the correct address, ignore the message. Also add the connection to the exceptions in your Web browser (depending on the browser).

The login page of the WBM is opened.

4.5 User data for the first login to the WBM

Standard user data

In the factory the following login data is set as default.

Note

With the following user data you can log in the first time to the WBM.

User data	Default values set in the factory
User name	admin
Password	admin

Note

Changing standard user data

For security reasons, the factory set default password of the standard user must be changed when you log in the first time.

For security reasons, it is recommended that you create another user after the first login. You will find the description in the section User (Page 105).

Loss of changed standard user data

Note changed or newly assigned user names and passwords.

If you change user data of the standard user, lose the changed user data and have not created a second user, you no longer have access to the WBM of the RTU. In this case, you can only access the WBM of the RTU after resetting to the factory settings. When you reset the configuration data is lost.

4.6 Logging in

Logging in

After establishing a connection between the configuration PC and the RTU, the WBM opens with the page for the user to log in.

Enter the user name and the password.

Note

User data

When you log in the first time note to the information in the section User data for the first login to the WBM (Page 71).

You will find instructions on changing user data and on the loss of access data (user name, password) in section User (Page 105).

After clicking the "Log in " button the start page of the WBM is opened..

Note

Max. 2 connections to the WBM

If two connections are established to the WBM, note that changes cannot be made at the same time on both connections.

4.7 Start page

4.7.1 Overview

Overview

After logging in to the WBM, the start page appears.

On the left you will find the navigation area with the main levels of the WBM.

On the right you will find the two tabs. "Overview" and "Status".

Change to the various tabs by clicking the tab name.

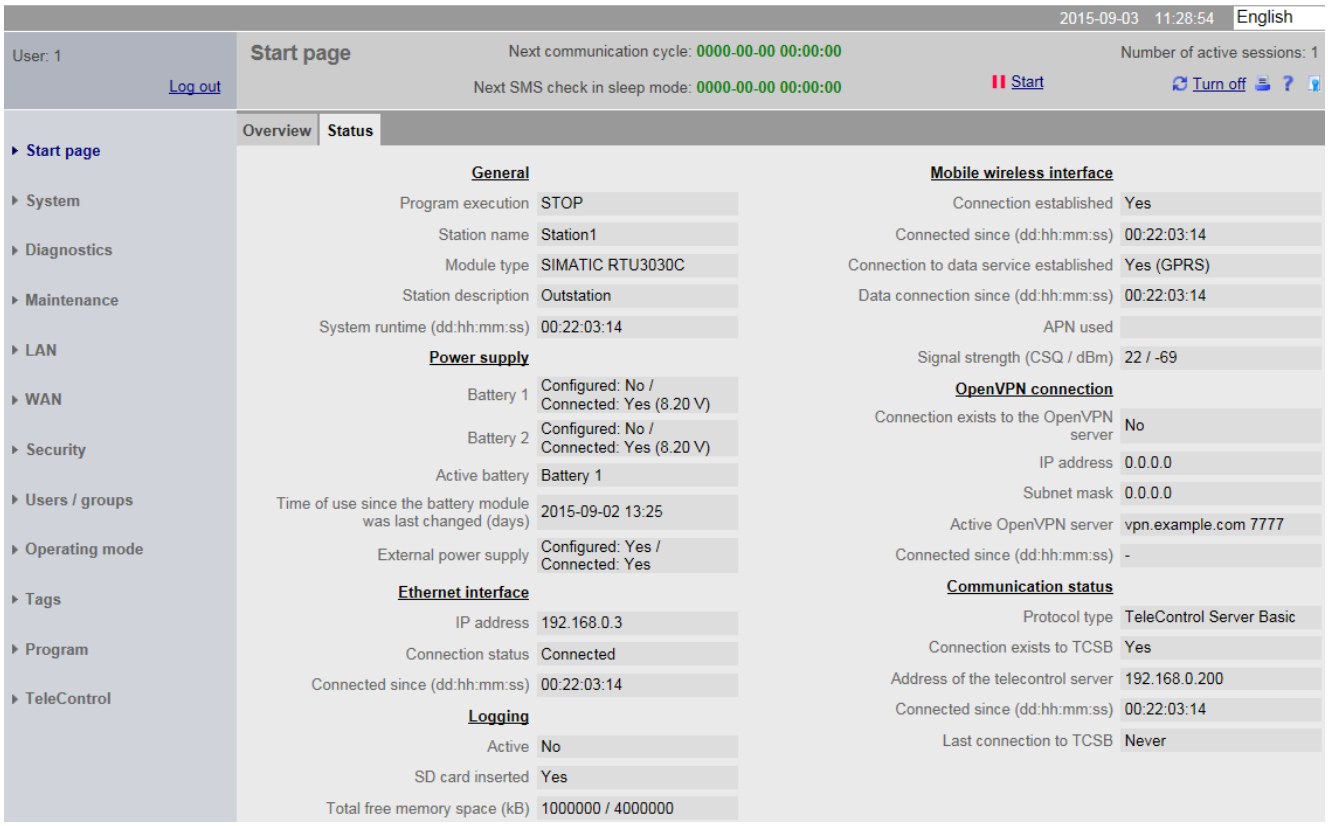

Figure 4-3 Start page of the WBM with the open "Status" tab

The "Overview" tab

The "Overview" tab shows a picture of the RTU. When you are connected to the operating RTU, the LED symbols shown in the WBM reflect the original status of the LEDs on the RTU.

- **Status LED**

  If an error occurs (the STATUSis not lit green) a message text is output in this line.

- **Show diagnostics buffer**

  You can jump directly to the page of the diagnostics buffer via the link and check the diagnostics messages.

Navigation in the WBM

By clicking on an entry in the navigation area on the left open the WBM page you want for further information or on which you want to configure or program.

The WBM opens the first tab of the entry.

4.7.2 Status

The tab provides an overview of important status data of the RTU. Some of the display parameters are commented on below.

Note on navigation:
By clicking on the titles (bold and underlined) of the parameter groups you jump directly to the relevant WBM page.

General

Information on the device and the configuration data of the station

- Program execution

  Runtime status of the program (controller)

- Station name

  The station name configured in "System" > "General". It is included in the addressing of the station when using the communications protocol "TeleControl Basic".

- System runtime (dd:hh:mm:ss)

  Runtime of the RTU since commissioning or since the last reset

Power supply

Information about the battery module being used or about the external power supply

- Day of the last battery change

  Time of the last change of the currently used battery

Ethernet interface

Information on the LAN interface

Logging

Information on logging and the SD card

Mobile wireless interface

Information on the configuration data and the current status of the mobile wireless interface

- Connected since (dd:hh:mm:ss)

  Time since last booking into the mobile wireless network.

- Data connection since (dd:hh:mm:ss)

  The time since the connection to the data service of the mobile wireless network.

OpenVPN connection

Information on the configuration data and the connection status of the OpenVPN configuration

When the OpenVPN client of the RTU is not configured, the default server name is displayed here.

Telecontrol status

Information about the communication configuration. "Protocol type" shows the communications protocol, being used.

4.8 System

4.8.1 General

Note the characters permitted for the input boxes, see section String lengths and permitted characters (Page 64).

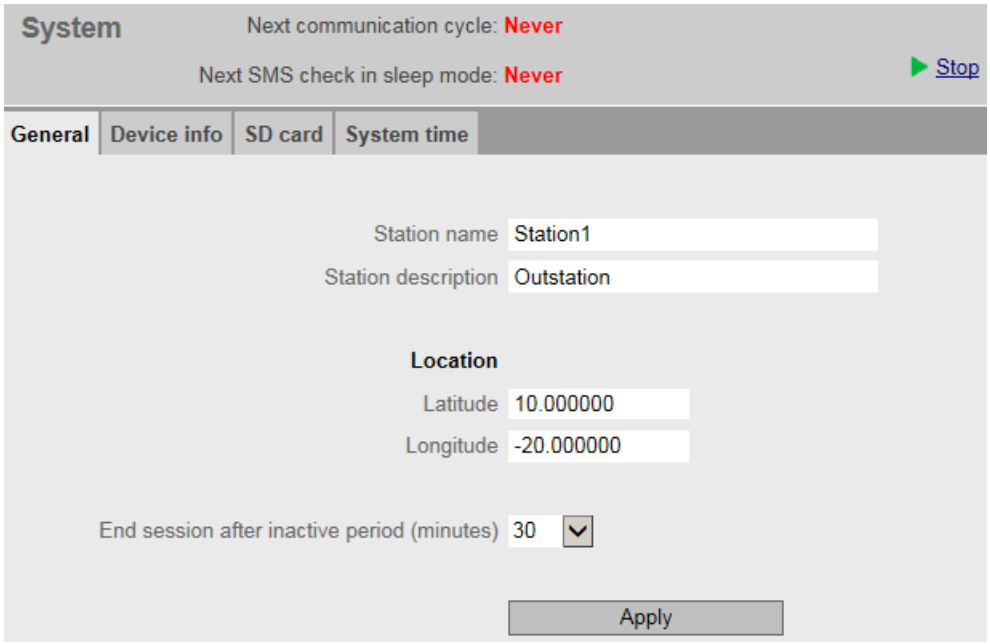

- **Station name**

  Assign the station name of the RTU.

  Note the further use of the station name with the various communications protocols:

  – TeleControl Basic

    The station name only serves to provide structural information about your systems when using the "TeleControl Basic" protocol.

  – DNP3

    You configure the station address on the WBM page "TeleControl" > "DNP3".

  – IEC

    You configure the station address (common address of the ASDU) on the WBM page "TeleControl" > IEC 60870-5".

- **Station description**

  Optional: Enter a free description of the station (max. 20 characters).

Location

Enter the latitude and longitude of the RTU location as degrees.

60 min corresponds to 1 degree. The first two decimal places of the input boxes are the minutes.

60 seconds correspond to 0.01 degrees. The 3rd and 4th decimal places of the input boxes are the seconds.

- **Latitude**

  Range of values: -90.0000 .. 90.0000

  Positive values for north, negative values for south

- **Longitude**

  Range of values: -180.0000 .. 180.0000

  Positive values for east, negative values for west

- **End session after inactive period (minutes**)

  From the drop-down list, select the time, after which a session in the WBM is closed automatically if no user input is detected.

  After closing s session, you need to log in again with user name and password.

  As long as a user is logged in, the RTU does not change to sleep mode.

4.8.2 Device info

Displayed data

- System runtime (dd:hh:mm:ss)

  Time since the RTU last started up

- Article number
- Serial number
- Hardware product version

4.8.3 SD card

SD card

Displayed data

- **SD card inserted**
- **Total free memory space (kB)**

  Here the free (still available) and the entire memory on the SD card that can be used by the user are displayed.

  If the free space on the SD card is used up, on the page "Operating mode" > "Logging" you can make the setting as to whether the oldest process data is overwritten by new data (FIFO principle) or the logging is stopped.

Parameter

- **Notifications**

  Here you specify whether the events that can be configured later cause a message (SMS message or e-mail) to be sent or not.

- **Change immediately to communication mode**

  If the option is enabled if one of the events configured later occurs, the RTU changes to communication mode and sends the message.

  If the option is disabled, the RTU sends the message only the next time a mobile wireless connection is established.

- **Recipient group**

  Here, enter the recipient group for message. You configure recipient groups on the WBM page "Recipient / Groups".

- **When when free memory space falls below the limit**

  Here you specify whether a message is sent when a value falls below a configurable limit value (next parameter). The check for free memory space only takes place when logging is enabled and for at least one variable.

- **Limit value (KB)**

  If the value falls below the limit value, the RTU sends a message if the option above was enabled.

- **Subject and text**

  Here, you enter the text and subject of the message. You configure the texts on the WBM page "Tags" > "Texts".

- **When the SD card is full**

  Here you specify whether a message is sent if there is no longer any free on the SD card. The check for free memory space only takes place when logging is enabled and at least one variable has been logged.

- **Subject and text**

  Here, you enter the text and subject of the message.

Savable files below the parameter area

Below the parameter area, the names of the files saved on the SD card are displayed. By clicking on the file name, you can save the file from the SD card to the file system of your PC.

Naming conventions for the file names

Files that were written to the SD card from the RTU, meet the DOS format:
<1...8 characters>.<1...3 characters>

The file names are structured according to the following scheme:

- **Configuration files**

  Files with configuration data of the RTU:

  *.CFG

  – The file "default.cfg" is created automatically by the RTU and updated with every change to the configuration.
  – The file "user.cfg" is a file created manually by users ("Maintenance" > "Configuration").

- **Log files**

  Files of the RTU with process data

  – Files created daily:

    <XXX><yy><ddd>.LOG

  – Files created weekly:

    <XXX><yy>w<ww>.LOG

  – Files created monthly:

    <XXX><yy>m<mm>.LOG

  The components have the following meaning:

  – <XXX>: Prefix of the file name that is configured on the WBM page "Operating mode" > "Logging".
  – <yy>: Placeholder for the year (the two last places of the year)
  – <ddd>: Placeholder for the day in the year (1...365)
  – w: Identifier for weekly log files
  – <ww>: Placeholder for the week in the year (1...52)
  – m: Identifier for monthly log files
  – <mm>: Placeholder for the month in the year (1...12)

- **Diagnostics buffer file**

  File with the diagnostics buffer entries of the RTU:

  diagbuf.txt

- **Other files**

  Files that you yourself save on the SD card:.

  .

4.8.4 System time

Buffering of the time

The internal RTU clock is maintenance free and buffered by a capacitor, to be able to bridge the duration of a battery change. With this, the simultaneous failure of the battery module and the external power supply can be bridged for 3 hours (at room temperature).

System time

In this tab, you configure the time and time-of-day synchronization of the RTU.

Note

Time-of-day synchronization

With applications that require time-of-day synchronization (e.g. communication via mobile wireless), you should synchronize the time of day of the RTU. If you do not synchronize the time of day of the RTU regularly, there may be deviations of several seconds a day between the time of day of the RTU and the time-of-day of the master station.

Note

Settings when using the IEC protocol

If you use an IEC master with daylight saving time changeover, you should select the following settings for the RTU:

- Specify a time zone.
- Select the "Automatic daylight saving time switch" option.
- As the synchronization method, the option "By the telecontrol master" is the default

The RTU then takes the time from the master. The master calculates the time offset of the daylight saving time from the time stamps of the frames received from the RTU.

Local time zone

- **Time Zone**

  Set the time zone in which the RTU is located either by entering it manually or selecting an entry from the drop-down list.

- **Automatic daylight saving time switch**

  If you sent the time zone manually, you can enable the automatic changeover of daylight saving time and standard time and set the parameters for this.

- **Enable time-of-day synchronization**

  By enabling the option, you enable synchronization of the RTU time of day.

  The time of day is synchronized each time the RTU changes to communication mode.

  As an option, at the bottom of this WBM page you can set the time of day of the RTU manually or adopt it from the configuration PC.

- Synchronization method

  You can enable synchronization of the RTU time of day , according to one of the following methods.

  When you enable the telecontrol function the option "By telecontrol master" is adopted automatically.

  – NTP

    The RTU supports the SNTP (Simple Network Time Protocol) method on the wireless interface..

    If you want to use this option, make sure that the specified NTP server can be reached via the mobile wireless network.

  – By mobile wireless network

    The RTU adopts the time of day from the mobile wireless network.

    The RTU supports the NITZ (Network Identity and Time Zone) service on the wireless interface. Check with your network provider to find out whether this function is supported in your mobile wireless network.

  – By telecontrol master

    The RTU adopts the time of day from the communications partner (telecontrol server or master).

- Accept time of day from non-synchronized NTP servers

  If the option is enabled, the RTU also accepts the time-of-day from non-synchronized NTP servers with stratum 16.

  If the option is disabled, the response is as follows: If the RTU receives a time-of-day frame from an unsynchronized NTP server with stratum 16, the time of day is not set according to the frame. In this case the RTU uses the last accepted time of day.

Diagnostics messages

- Check time-of-day synchronization

  If this option is enabled, the RTU checks whether its time of day has been set according to the settings made.

  – If the time of day was set, the RTU enters a diagnostics message of the class. "INFO" in the diagnostics buffer.

  – If the time of day could not be set, the RTU enters a diagnostics message of the class. "ERROR" in the diagnostics buffer.

  The diagnostics messages are entered incoming/outgoing; in other words, only the last message is entered in the diagnostics buffer.

- Reduction factor for communication cycle

  By selecting an entry from the drop-down list, you specify the reduction factor for the cycle in which the RTU checks the time of day synchronization.

  The basis for the checking cycle is the basic cycle of the communication mode that you configure on the WBM page "Operating mode".

If you select a reduction factor of 1, the acceptance of the time of day is checked with each change to the communication mode.

If you select a higher reduction factor, the cycle is increased according to the displayed value.

Set system time manually

Select one of these options if you want or need to reduce communication via mobile wireless.

The system time set here is kept by the internal clock of the RTU. For information on the accuracy, see section Technical data (Page 207).

- New system time

  Here, enter the current time of day manually.

  When making your entry, keep to the specified format.

  Month, day, and hour can also be entered as single digits. Example: March is accepted as "03" or as "3".

  If you click the Apply new time of day button the RTU adopts the entered time of day.

- Adopt PC time

  If you click the Adopt PC time button the RTU adopts the time of day from the configuration PC.

Time-of-day format and time stamps

System time of the RTU

The RTU keeps its time-of-day as UTC. The time of day and includes the time difference since 01.01.1970 in milliseconds.

Time stamp of the frames

If the communications services are activated, the time stamps of the frames are transferred depending on the protocol being used:

- TeleControl Basic

  Transfer of the time stamps in UTC format (48 bits)

- DNP3

  Transfer of the time stamps in UTC format (48 bits)

- IEC 60870-5

  Transfer of the time stamps in the "CP56Time2a"format

  Keep to the recommended settings in the note above.

4.9 Diagnostics

4.9.1 Diagnostics buffer

Diagnostics buffer

The diagnostics buffer receives diagnostics messages for internal events and errors. It can hold a maximum of 200 entries. When the maximum number is exceeded, the oldest entries are overwritten.

The entries in the diagnostics buffer contain a consecutive number, a classification, a time stamp and the message text.

Below you will find several examples of events that are entered in the diagnostics buffer:

- RTU startup
- Change to the configuration
- Establishment/abort of the communications connection
- Time-of-day synchronization
- Power failure

The diagnostics messages are classified as follows:

- INFO

  Information about a special event
- WARNING

  Warning of a possibly unwanted event
- ERROR

  Internal error. The RTU continues to run.
- FATAL

  Serious error that impairs or interrupts the operation of the RTU.

Copy of the diagnostics buffer

You have the following options for saving the entire diagnostics buffer:

- **Save on SD card**

  Manual saving on the SD card
- **Save to PC**

  Manual saving in the file system of the configuration PC
- **Save a copy of the diagnostics buffer if serious errors occur...**

  By activating the option you can ensure that if errors of the class FATAL occur, the diagnostics buffer is automatically backed up on the SD card.

4.9.2 Notifications

- **Send notifications**

  Here, you set whether the RTU sends a notification by SMS message or e-mail if an event (message) occurs.

  The plain full text of the message is sent in a notification.

- **Message class**

  Here, you set the message class.

- **Change immediately to communication mode**

  If you select the option, the RTU changes immediately to communication mode as soon as an event triggers the sending of the notification.

- **Recipient group**

  Here you specify configured groups as recipients of the notification in "Users / groups".

Only with when sending e-mails:

- **Attachment**

  Here, select the attachment that will be sent with the e-mail.

- **Attachment zipped**

  If you enable the option, the attachment is sent compressed as a ZIP archive.

4.10 Maintenance

4.10.1 Configuration

In this tab you can save the configuration data of the RTU in a configuration file and load it again.

Configuration files have the file format *.cfg

Configuration

Load configuration

With this function a configuration file created previously and saved on the PC is loaded on the RTU.

- **File**

  After selecting a configuration file stored on the configuration PC using the "Search button, the file name is displayed here.

- **Search**

  Searches the file system of the configuration PC for a configuration file saved there that is intended to be loaded on the RTU.

- **Load on device**

  Loads the configuration file shown under "File" on the RTU.

  Note

  On completion of loading, the configuration data of the loaded configuration file is used immediately by the RTU.

- **Load from SD card**

  Loads the configuration file located on the SD card on the RTU.

  Note

  On completion of loading, the configuration data of the loaded configuration file is used immediately by the RTU.

  Note the behavior of the RTU when there are several configuration files on the SD card, refer to the section "Startup of the RTU with configuration files" below.

Save configuration

With this function the current configuration data of the RTU is saved in a configuration file.

- **Save on SD card**

  Saves the current configuration file under the name "user.cfg" on the SD card.

- **Compress and encrypt file (optional)**

  If you enable the option, the configuration file is saved and encrypted compressed as a ZIP archive.

- **Password for optional encryption**

  Input box for the password for encryption of the configuration file

  The following requirements apply to the password to be entered:

  – Length: At least 1 character, maximum 16 characters.

  – Permitted characters

    Digits, lowercase letters, uppercase letters and special characters from the ASCII character set 0x20 .. 0x7e

    See also section String lengths and permitted characters (Page 64).

  – Required characters: Free combination of the permitted characters

- **Save to PC**

  Saves the current configuration file under the name "user.cfg" on the configuration PC.

Names of the configuration files

You can save different configuration files on the SD card.

Automatic saving in the configuration file "default.cfg"

When using an SD card if the configuration data of the RTU is automatically stored in the file "default.cfg".

When changed configuration data is adopted the file "default.cfg" is automatically updated on the SD card.

Manual saving in the configuration file "user.cfg"

When you save manually using the WBM, the configuration data is stored on the SD card in a file with the default name "user.cfg".

In addition to this, with each change to the configuration data the file "default.cfg" is automatically updated.

Startup of the RTU with configuration files

If you store different configuration files on an SD card and plug this into an RTU, the RTU always runs with the internal configuration data.

If an SD card with the file "default.cfg" is inserted in a brand-new RTU or an RTU reset to the factory settings, the RTU always starts with the file "default.cfg".

Editing configuration files

You can edit and change a configuration file saved on the PC with a text editor.

Make sure that you make the changes consistently. Do not change any data if you are not sure that it does not contradict settings at another location. Example: The settings "Telecontrol activated" and at the same time. "Mobile wireless interface deactivated" are inconsistent.

Inconsistent configuration files are rejected by the RTU.

Note

No editing of encrypted entries

Encrypted parts of a configuration file, entries such as passwords or the OpenVPN key must not be changed.

If encrypted parts are changed, the RTU rejects the configuration file when you try to load it.

Note

Editing configurations with a text editor

When editing a configuration file with a text editor, make sure that you do not use any special characters but only characters of the following ASCII character sets:

- 0x30 .. 0x39 (0 .. 9)
- 0x41 .. 0x5A (A .. Z)
- 0x61 .. 0x7A (a .. z)

  See also section String lengths and permitted characters (Page 64).

If you use special characters you need to save the file in the UTF-8 format.

4.10.2 Firmware

This page displays the most important version data of the firmware currently being used.

If a new firmware version is available, you can download the firmware file from the configuration PC to the RTU via this WBM page.

Note

Digitally signed and encrypted firmware prevents manipulation by third parties

To be able to check the authenticity of the firmware, the firmware is digitally signed by Siemens. This allows manipulation by third parties to be detected and prevented.

The encryption of the firmware is intended to prevent re-engineering.

Firmware status

The following information is shown:

- Station name

  Station name that you assigned on the "System" Web page.
- Activated firmware version
- Activated on

  The activation date of the firmware
- Bootstrap version

  The bootstrap version of the firmware
- IfMobile wireless module version

  The version of the mobile wireless module of the RTU

Firmware update

If a new firmware version is available for the RTU, you will find this on the Internet pages of Siemens Industry Online Support:

Link: (https://support.industry.siemens.com/cs/ww/en/ps/15920)

Firmware files have the file format *.sfw

Download the firmware file to the file system of your configuration PC.

- **File**

  After selecting a firmware file stored on the configuration PC using the "Search button, the file name is displayed here.
- **Search**

  Searches the file system of the configuration PC for a firmware file saved there that is intended to be loaded on the RTU.
- **Load on device**

  By clicking the button, download the selected firmware file to the RTU.

Following the download the firmware is not yet used. The following properties of the new firmware file are displayed:

- Status

  Shows whether the firmware file was downloaded free of errors or with errors.

- Signature status

  Shows the result of the signature check.

- Description

  Shows the directory on the configuration PC from which the firmware file was downloaded.

- Version

  Version of the loaded firmware file

If If you do not want to use the loaded firmware file, you can remove this again with the "Delete" button.

- **Activate and restart**

  If you want to use the downloaded firmware file, click the "Activate and restart" button.

  Note that updating the firmware can take a while.

  Note
  No configuration during activation

  During activation until the RTU restarts, the WBM is not locked.

  Do not make any settings during this time. It is not possible to establish whether settings are correctly adopted during this time.

  Note
  Do not switch off the RTU

  During activation of the firmware do not switch off the RTU. This avoids the occurrence of inconsistent statuses.

  Note
  Restarting the RTU

  When the new firmware is activated, the RTU runs a restart. You can recognizes the current status based on the LED picture, see section LEDs (Page 34).

- **Delete**

  Deletes a loaded and not yet activated firmware file from the RTU.

4.10.3 Operating status

Operating statuses

Apart from using this WBM page you can also execute the functions described below using the button on the RTU, see section The button "WKUP/RESET" (Page 40).

The three buttons on this tab have the following functions:

- **Shut down to safe status**

  Shutting down to a safe status has the effect that the RTU books out of the mobile wireless network and ends all writes to the SD card. This is a requirement for changing a SIM card or an SD card.

  If you want to change the battery (when using only one battery module), you can then disconnect the device from the power supply.

- **Run a restart**

  When restarting, existing connections are interrupted and cyclic processing stops. The RTU restarts.

- **Reset to factory settings**

  Resets the RTU to the factory settings. During this all parameters are reset to the initial statuses as shipped and the RTU restarts.

Note

Note the effects of resetting

Note the effects described below before you start the reset.

Effects of resetting to factory settings

When you reset to factory settings, almost all the data on the RTU is deleted. Among other things, the following are deleted:

- User names and passwords
- PIN of the SIM card being used
- Diagnostics buffer
- All configuration data, including preset configuration data on the SD card

The following are not deleted:

- Configuration files saved manually on the SD card
- Log files on the SD card

Note

RTU not reachable via the mobile wireless network

After resetting to factory settings, the RTU can no longer be reached via the mobile wireless network.

If an SD card is plugged in, the following are also deleted:

- The automatically saved configuration file default.cfg
- The diagnostics buffer file

After the reset the RTU is restarted.

Following startup the RTU can only be reached via the Ethernet interface under the default IP address 192.168.0.3 or the host name "simatic.rtu", refer to the section Establishing the connection between RTU and configuration PC (Page 67).

Backing up configuration data prior to resetting

If you do not want to discard configuration data of the RTU, you can back up the data prior to resetting as follows:

- Configuration data on the SD card

  When using an SD card, you can remove the SD card prior to resetting and use it again after the reset. Since you cannot change the SD card during operation, you need to follow the steps below:

  – Shut down the RTU to the safe status
  – Remove the SD card

    Refer to the section Inserting the SIM card and SD card (Page 47) for this.
  – Reset to factory settings
  – After the restart when shut down the RTU to the safe status
  – Insert the SD card
- Saving on the configuration PC

  As an alternative you can save the configuration file on the configuration PC and following the reset and subsequent restart download it to the RTU, refer to the section Configuration (Page 84).

4.10.4 Online support

Here you can call up the Internet pages of Siemens Industry Online Support.

Online support

Link to the Internet portal of Siemens Industry Online Support

Click on "Siemens Industry Online Support" to connect to the Internet pages of Siemens Online Support.

There, you can search for information on the product or send a query to product support.

Configuration of the logging

In some cases, product support can send you a logging file of the type *.sup to log events. You save this logging file in the file system of the configuration PC. On this WBM page you download the file to the RTU.

For logging you require an SD card with at least 8 MB free space.

- **File**

  After selecting a logging file stored on the configuration PC using the "Search button, the file name is displayed here.

- **Search**

  Searches the file system of the configuration PC for a logging file saved there that is intended to be loaded on the RTU.

- **Load on device**

  By clicking the button, download the selected logging file to the RTU.

- **Delete**

  Deletes a no longer required logging file from the RTU.

  After deleting the logging file, logging is disabled again.

Enable logging

After loading the logging file, logging must be actively enabled.

- **Enable logging and save the file on the SD card**

  By enabling the option logging is started as soon as you click the "Apply" button.

  The log file is saved on the SD card and updated during operation if relevant events occur.

Use of the logging

You should only use logging of events. If you have problems with the RTU that you cannot solve yourself.

Note

Protecting the SD card by disabling logging

To avoid shortening the working life of the SD card too much, logging should be disabled during normal operation of the RTU.

When logging is enabled, during runtime the RTU continuously saves information about important events that have occurred. The saved data contains information on the configuration, active procedures and error situations.

The data is saved on the SD card in a log file with the name "support.bin". The information in this file is encrypted and can only be read by Siemens Industry Online Support. On completion of logging sent the log file back to your contact at Siemens Industry Online Support.

4.11 LAN

4.11.1 Configuration

The Ethernet interface X1P1 of the RTU is used for local connection of the configuration PC. It is not suitable for connecting larger networks.

Configuration of the Ethernet interface

In this tab you will find the most important data of the Ethernet interface:

- MAC address
- Connection status

  Connection status to the Ethernet network
- Transmission properties

  Transmission speed and direction dependency (default: 100 Mbps, full duplex)
- Connected since (dd:hh:mm:ss)
- IP address

  Shows the default or last configured IP address. You can change the data.
- Subnet mask

  Shows the default or last configured subnet mask. You can change the data.

Note

No address check

The RTU does not check the address bands. If If a duplicate IP address is detected, the STATUS LED starts to flash red and the RTU is no longer reachable via the Ethernet interface.

DHCP server

- DHCP server active

  Activate the DHCP server of the RTU. If you want to be free with the addressing of the configuration PC to be connected. In this case prior to connecting you need to activate the "DHCP client" functionality on the configuration PC. When the PC is connected to the RTU, the RTU assigns the PC an IP address. This is the next higher address after the RTU's own address.

If the DHCP server of the RTU is not activated (check box not selected), you will need to assign a fixed IP address in the same subnet as the RTU to the connected configuration PC manually.

4.12 WAN

4.12.1 Overview

The following information on the mobile wireless connection of the RTU is displayed in the Overview.

- **Connection established**

  Connection status to the mobile wireless network

- **Connected since (dd:hh:mm:ss)**

  Duration of the existing mobile wireless connection

- **Connection to data service established**

  Status of the connection to the data service GPRS or UMTS

- **Data connection since (dd:hh:mm:ss)**

  Duration of the existing connection to the data service

- **PIN**

  After changes to the PIN configuration, the status of the PIN is only displayed the next time the RTU changes to communication mode.

  – Check mark on a green background

    Indicates that the entered PIN is identical with the PN on the SIM card.

    The PIN was saved successfully on the device.

  – Cross of a red background

    Shows that an incorrect PIN was entered or that the SIM card is not plugged in.

- **Signal strength CSQ (dbm)**

  – CSQ = 0 .. 8 (-112 .. ≤ -97 dBm): No reception possible

  – CSQ = 9 .. 16 (-95 .. -81 dBm): Medium signal quality

  – CSQ = 17 .. 31 (≥ -79 dBm): Good signal quality

  – CSQ = 99 (≤ -113 dBm): No signal detectable

- **APN used**

- **IMEI**

  International Mobile Equipment Identity of the network provider

- **IMSI**

  International Mobile Subscriber Identity of the mobile wireless network provider

- **IP address**

  IP address of the RTU assigned by the mobile wireless network provider.

- **DNS server**

  IP address of the DNS server assigned by the mobile wireless network provider

4.12.2 Mobile wireless settings

Note

Costs of a connection via the mobile wireless network

When attempting to establish a connection and when receiving a connection via the mobile wireless network frames are exchanged. Depending on the contract with the mobile wireless network provider costs may arise.

Mobile wireless settings

Here you configure the mobile wireless connection of the RTU.

- **Enable mobile wireless interface**

  Activates the mobile wireless interface of the RTU.

  If the mobile wireless interface is deactivated, the RTU can no longer be reached using mobile wireless.

- **PIN of the SIM card**

  The PIN protects the mobile wireless contract partner from unauthorized use of the SIM card.

  The SIM card plugged into the RTU is a requirement for successful entry of the PIN.

  Enter the PIN for your SIM card that you received from your mobile wireless network provider in the input box. If you use a SIM card without a PIN, leave the input box empty.

  Note

  Locking if an incorrect PIN is entered three times

  If you enter the PIN incorrectly three times in sccession, the SIM card will be locked. For information on unlocking, see below.

  An incorrectly entered PIN is not saved on the RTU.

- **Allow roaming**

  Roaming is dialing in to the mobile wireless network of a third-party provider when the mobile wireless network of your contracted mobile wireless network provider cannot be reached.

  – Option enabled:

    The RTU dials with highest priority into the mobile wireless network of the contracted network provider set on the SIM card. If a dialing up the contract network fails, the RTU dials up another mobile wireless network with which the network provider has a roaming contract and whose access data is stored on the SIM card.

  – Option disabled (no roaming):

    The RTU only dials up the mobile wireless network of the contract network provider whose SIM card is plugged into the RTU.

- **Selection of the mobile wireless standard**

  Here you specify the mobile wireless standard that the RTU is to use. The following options are available:

  – Automatic

    The mobile wireless network with the higher standard (UMTS) is selected automatically.

    Fallback behavior of the RTU
    If the establishment of a connection via a mobile wireless network with the UMTS standard fails, the RTU attempts to dial in to an available network with the next lower mobile wireless standard (GSM).

  – Only GSM/GPRS

    The RTU attempts to establish a connection only in a GSM network (GPRS).

  – Only UMTS

    The RTU only attempts to establish a connection in a UMTS network.

- **Assign SMSC number**

  Enable the option if the RTU should use an alternative SMSC (Short Message Service Center) and not the one saved on the SIM card by the network provider.

  Enter the phone number of the required SMSC in the input box. You obtain this number from the relevant mobile wireless provider.

- **Enable data service in the mobile wireless network**

  Enable this option if you want to send data frames or time-of-day frames from the mobile wireless network or want to receive them from an NTP server. In this case, make sure that your mobile wireless contract allows the use of IP-based data services.

  If the option is disabled, the RTU can only receive and send SMS messages. The sending of data and e-mails is then not possible.

- **APN**

  When using data services, an access point is required as the gateway from the mobile wireless network to the Internet. The APN (Access Point Name) is the name of the gateway you receive from your mobile wireless network provider.

  Enter the APN in the input box.

- **User name**

  Enter the user name for the APN. You obtain access data from your mobile wireless network provider.

  If your mobile wireless network provider does not require access data, leave the boxes for user name and password empty.

- **Password**

  Enter the password for the APN. You obtain access data from your mobile wireless network provider.

- **Authentication method**

  Select one of the following authentication methods according to which the user name and password of the APN will be transferred:

  – No authentication

  – PAP

    Password Authentication Protocol

    Authentication protocol with unencrypted transfer of user name and password

  – CHAP

    Challenge Handshake Authentication Protocol

    Authentication protocol with encrypted transfer of user name and password

Unlocking the SIM card

If you have entered the PIN incorrectly three times , the SIM card will be locked and you then need to unlock the SIM card:.

1. Remove the SIM card only when the power supply the RTU is turned off, refer to the section Inserting the SIM card and SD card (Page 47).
2. Insert the removed SIM card in a mobile phone.
3. Unlock the SIM card by entering the PUK or the Super PIN.

   You will have received the PUK or super PIN from your mobile wireless network provider along with the SIM card.
4. Place the unlocked card back in the RTU.
5. After restarting the RTU enter the correct PIN via this WBM page.

4.12.3 Wireless cell

Note

Updating the data

The data on this page is updated at 1 second intervals.

Calling up this page means that the RTU uses more energy.

- Wireless cell identifier (CI)
- Signal strength CSQ (dbm)

  Signal strength of the mobile wireless network as CSQ (Cell Signal Quality) and as received signal strength RSSI [dBm]

  CSQ and RSSI correspond as follows:

  – CSQ = 0 .. 8 (-112 .. ≤ -97 dBm): No reception possible
  – CSQ = 9 .. 16 (-95 .. -81 dBm): Medium signal quality
  – CSQ = 17 .. 31 (≥ -79 dBm): Good signal quality
  – CSQ = 99 (≤ -113 dBm): No signal detectable
- Signal quality

  Signal quality as a percentage
- Location Area Code

  Location identifier
- Mobile wireless standard of the wireless cell
- Network type
- Network name
- PLMN

  Public Land Mobile Network

  Worldwide unique identifier of mobile wireless networks consisting of:

  – MCC (Mobile Country Code)
  – MNC (Mobile Network Code) of the network provider

  Example: The PLMN 26276 (Siemens test network) is made up of MCC = 262 and MNC = 76.

4.12.4 SMS

In this tab you can allow or block receipt of SMS messages by the RTU.

- **Allow receipt of SMS messages**

  If the option is enabled, the RTU can receive SMS messages. The following SMS messages are accepted:

  – Wake-up SMS to change the RTU from the sleep mode to the communication mode

    For information on the configuring wake-up SMA messages, refer to the section Wake-up call / wake-up SMS (Page 154).

  – SMS message as trigger for the sending of a diagnostics SMS message

    For diagnostics SMS messages, refer to the section Diagnostics options (Page 201).

  If the option is disabled, the RTU does not fetch any SMS messages from the SMSC.

- **Acknowledgment of wake-up SMS message**

  If you enable the option, receipt of a wake-up SMS message is acknowledged by the RTU.

- **Additional communication cycle at a number of buffered SMS messages**

  The RTU stores up to 12 SMS messages that should not or cannot be sent immediately. When this number is reached and further messages are generated, the messages generated last are lost.

  Here, you can enter the number of stored SMS messages as of which the RTU runs through an additional communication cycle. This ensures that both all stored messages are sent and all messages from communications partners are received.

  Range of values: 2 ... 12

4.12.5 E-mail

In this tab you make these settings for sending e-mails. You will find the various types of e-mail in the section Communications services (Page 17).

The following data must be configured:

- **NTP server name**

  Name of the SMTP server. You will receive the data from your service provider.

- **Port number**

  Port number of the SMTP server. You will receive the data from your service provider.

- **Connection security**

  Here, select from the following options:

  – Only STARTTLS

    With this setting, e-mails are only sent when STARTTLS is supported by the service provider.

  – STARTTLS, if possible

    With this setting, e-mails are also sent when STARTTLS is not supported by the service provider.

- **Own e-mail address**

  E-mail address of the RTU. You will receive the data from your service provider.

- **User name**

  User name required by the SMTP server. You will receive the data from your service provider.

- **Password**

  Password name required by the SMTP server. You will receive the data from your service provider.

CA certificate

Here, you have the option of replacing the CA certificate of the RTU for sending e-mail with STARTTLS.

- **Currently used file**

  Shows the name of the certificate file currently being used by the RTU..

- **File used after applying**

  Shows the name of the last certificate file to be loaded on the RTU (on clicking the"Load on device" button).

- **Load new file**

  After selecting a certificate file stored on the configuration PC using the "Search button, the file name is displayed here.

- **Search**

  Searches the file system of the configuration PC for a certificate file saved there that is intended to be loaded on the RTU.

- **Load on device**

  By clicking the button, download the selected certificate file to the RTU.

- **Encrypt zipped attachments**

  If you enable the option, the attachments of the e-mails compressed as a ZIP archive are transferred encrypted.

- **Password**

  Password for the encryption of the e-mail attachments.

  The attachments can only be decrypted with this password.

- **Additional communication cycle at a number of buffered e-mails**

  The RTU stores up to 12 e-mails that should not or cannot be sent immediately. When this number is reached and further messages are generated, the messages generated last are lost.

  Here, you can enter the number of stored e-mails as of which the RTU runs through an additional communication cycle. This ensures that both all stored messages are sent and all messages from communications partners are received.

  Range of values: 2 ... 12

Test e-mail

Here, for example, you can send a test e-mail during commissioning.

- **Recipient group**

  Here, enter the recipient group for message. You configure recipient groups on the WBM page "Recipient / Groups".

- **Subject**

  Here, you enter the subject of the message. You configure the subject on the WBM page "Tags" > "Texts".

- **Text**

  Here, you enter the text of the message. You configure the texts on the WBM page "Tags" > "Texts".

- **Send test e-mail**

  Triggers the sending of the test e-mail.

4.13 Security

4.13.1 Overview

OpenVPN connection

- **Connection exists to the OpenVPN server**

  Connection status to the OpenVPN server

- **IP address**

  Shows the last IP address assigned by the OpenVPN server.

- **Subnet mask**

  Shows the last subnet mask assigned by the OpenVPN server.

- **Active OpenVPN server**

  Name or IP address of the OpenVPN server
- **Connected since (dd:hh:mm:ss)**

  Duration of the existing connection to the OpenVPN server

Statistics of the current connection

The numbers apply to the currently established connection.

For the meaning of the parameters, see below.

Statistics since restart

The numbers apply to all connections that were established since the last restart of the RTU.

- **Bytes received**

  Number of bytes that the RTU has received.
- **Frames received**

  Number of frames that the RTU has received.
- **Received frames lost**

  Number of frames received by the RTU that it could not process..
- **Bytes sent**

  Number of bytes that the RTU has sent.
- **Frames sent**

  Number of frames that the RTU has sent.
- **Frames to be sent lost**

  Number of frames, which were ready to send on the RTU that could, however, not be sent.

4.13.2 OpenVPN client

For the requirements for using OpenVPN, refer to the following section:

Scope of delivery, accessories, requirements (Page 25)

Security functions for communication (Page 20)

OpenVPN client

Parameter

- Active

  Select the option to enable secure communication via OpenVPN.

- OpenVPN server

  IP address or host name of the OpenVPN server

  Separated by a space: Port number of the server (UDP port). The default port as the number 1194.

  Example:
  192.168.234.1 1194

- Substitute OpenVPN server (optional)

  IP address or host name of an optional substitute OpenVPN server

  Separated by a space: Port number of the server (UDP port)

With the following parameters note that these match the settings of the OpenVPN server.

- Verification of the server certificate necessary

  The function is optional but for security reasons is, however, recommended.

  If this option is enabled during connection establishment, the client checks whether the certificate of the server is actually a server certificate based on the purpose of the certificate. This ensures that no other client can pretend to be a server with its valid client certificate.

- Cipher

  The following encryption standards are available:

  – AES-256_CBC
  – DES-EDE3_CBC
  – BF_CBC

    (BlowFish)

  To encrypt the data, the method CBC is always used.

  The parameter must be set the same on the server and client.

- Hash method (Digest)

  As hash algorithms for authenticating the user data the following can be used:

  – SHA-1
  – SHA-224
  – SHA-256

  The parameter must be set the same on the server and client.

- **Key exchange time (s)**

  Maximum time for the TLS key exchange after initializing the handshake.

  Permitted range: 0 to 65535 s. Default: 60 s. If you enter 0 (zero), the function is deactivated.

  Note that 60 seconds with bad connection quality may not be adequate.

- **Keepalive monitoring time (s)**

  If the partner does not respond to the keep alive frame within the keep alive monitoring time, the RTU aborts the connection.

- **Renewal interval for session key (s)**

  Interval (seconds) at which the session key is exchanged with the server.

  Permitted range: 0 to 65535 s. Default: 3600 s. If you enter 0 (zero), the function is deactivated.

  This interval can be set on the server and client. If the configured values differ the shorter interval is used.

Afterwards you can load the certificates and keys individually or alternatively as a common PEM file from the OpenVPN server "SINEMA RC"

CA certificate

Here you import the CAA certificate generated by the certification authority (CA).

Make sure that the files for the CA certificate, the client certificate and for the key are not in a common pkcs 12 file but separate. A pkcs12 file cannot be imported.

- **Currently used file**

  Display of the file name of the currently used file

- **File used after applying**

  After loading the file, the name of the loaded file is displayed here.

- **Load new file**

  After selecting a file stored on the configuration PC using the "Search button, the file name is displayed here.

- **Search**

  Searches the file system of the configuration PC for a certificate file saved there that is intended to be loaded on the RTU.

- **Load on device**

  By clicking the buttons, download the selected file to the RTU.

Own certificate

Here, you import the client certificate for the RTU.

- **Currently used file**

  Display of the file name of the currently used file

- **File used after applying**

  After loading the file, the name of the loaded file is displayed here.

- **Load new file**

  After selecting a file stored on the configuration PC using the "Search button, the file name is displayed here.

- **Search**

  Searches the file system of the configuration PC for a certificate file saved there that is intended to be loaded on the RTU.

- **Load on device**

  By clicking the buttons, download the selected file to the RTU.

Own key

Here you import the file of the private key generated by the assigned OpenVPN server.

A private key without password must be used.

- **Currently used file**

  Display of the file name of the currently used file

- **File used after applying**

  After loading the file, the name of the loaded file is displayed here.

- **Load new file**

  After selecting a file stored on the configuration PC using the "Search button, the file name is displayed here.

- **Search**

  Searches the file system of the configuration PC for a key file saved there that is intended to be loaded on the RTU.

- **Load on device**

  By clicking the buttons, download the selected file to the RTU.

Load PEM file from SINEMA RC

If you want to load the two certificates and the key from the OpenVPN server "SINEMA RC" as a common PEM file, then enable this option.

- **Password**

  Enter the password specified in "SINEMA RC" if you exported the key password-protected.

- **File used after applying**

  After loading the file, the name of the loaded file is displayed here.

- **Load new file**

  After selecting a file stored on the configuration PC using the "Search button, the file name is displayed here.

- **Search**

  Searches the file system of the configuration PC for a certificate file saved there that is intended to be loaded on the RTU.

- **Load on device**

  By clicking the buttons, download the selected file to the RTU.

4.14 User / Recipient

4.14.1 User

Incorrect entry / loss of the user name or passwords

Note

With the following user data you can log in the first time to the WBM.

User data	Default values set in the factory
User name	admin
Password	admin

Note

Changing the password

For security reasons, the factory set default password of the standard user must be changed when you log in the first time.

Note

Loss of changed standard user data

Note changed or newly assigned user names and passwords.

If you change user data of the standard user, lose the changed user data and have not created a second user, you no longer have access to the WBM of the RTU. In this case, you can only access the WBM after resetting the RTU to the factory settings. Resetting to factory settings involves the loss of the configuration data, refer to the section Operating status (Page 89).

Note

Entering the wrong user name or password

After entering an incorrect user name or incorrect password three times a lockout time of five seconds begins after which you can log in again.

User

A total of 20 users can be created.

You will find a description of the rights of the users in the section "Rights of the users".

Table

The table shows all users and their configured data.

- **Add**

  Creates a new user.

  When you create a new user, you need to assign the name, the user name and the password. . You can leave the other data boxes empty and complete them later.

- **Delete**

  Deletes the user selected in the table above.

  When you click the "Delete" button, two buttons are displayed as a prompt for confirmation:

  – Delete

    Deletes the selected user once and for all.

  – Cancel

    Cancels the deletion and the normal picture of the WBM page is shown again.

  All users except at least one can be deleted.

You configure the individual users below the table.

Change user

The following data can be configured optionally. Some data is necessary for the communication functions of the RTU.

Select a user in the table with the mouse.

- **Name**

  Name of the user (not the user name)

- **Companydepartment/positiion**

  Here, you can configure organizational characteristics of the user.

- **Phone number**

  The phone number of the user configured here is the authorized telephone number for waking the RTU and for receiving SMS messages by the RTU.

  For these functions the user requires a phone with the number entered here. The telephone must support the CLIP function (transfer of its own call number).

  Configuring the phone number

  – You will find the characters permitted in the section String lengths and permitted characters (Page 64).

  – An asterisk (*) after the body of the telephone number gives the right to establish a connection to all phones that have a phone number that includes the phone number body (e.g. body + extension number).

    Example: The entry +49-123456* entitles the following phone numbers:

    +49-123456-0, +49-123456-1, +49-123456-2 ...

    +49-123456-100, +49-123456-101 ...

  – If only an asterisk (*) is entered in the input box , the RTU wake-ups / SMS messages from all senders.

    Remember that with this option, the authorization is lost and due to incorrect calls costs for connection establishment attempts may result.

- **Wake-up call allowed**

  Only when this option is enabled does the RTU allow receipt of a wake-up call by this user.

  You will find further notes on waking the RTU in the section Wake-up call / wake-up SMS (Page 154).

- **Allow receipt of SMS messages**

  Only when this option is enabled does the RTU evaluate wake-up SMS messages or request SMS messages for a diagnostics SMS message from this user.

  Note that the receipt of SMS messages by the RTU is enabled on the WBM page "WAN" > "SMS".

- **E-mail address**

  E-mail address of the user for receiving e-mails sent by the RTU.

To change the access data (user name, password), you need to select the "Change login data" check box. The input boxes can then be edited.

- **Change login data**

  When this option is enabled, you can change user data.

  You will find a description of the rights of the users in the section "Rights of the users".

- **User name**

  Enter the new user name.

- **Password**

  Enter the new password.

- **Repeat password**

  Repeat the new password.

By clicking "Apply" the changed data is saved and needs to be entered at the next login.

Rights of the users

All created users have the same rights to create new users or delete them and to make settings on all WBM pages.

- All users can change their own data, including access data (user name, password).
- All users can change the user names and passwords of the other users.
- No user can read the password of another user.

This means that every user has administrator rights.

4.14.2 Recipient groups

Recipient groups

Here you specify the recipient groups for messages (SMS messages / e-mails) of the RTU.

When configuring the individual message types, you always specify a recipient group in the WBM as the recipient of the messages.

With the recipient groups you specify which message types are received by which groups of users. For example with a group concept. You can specify that certain messages are received by employees active in operation and other message types by service employees.

Every user can be assigned to any number of the maximum 10 groups.

Table

The table shows all recipient groups and their configured data.

- **Add**

  Creates a new group.

  When creating a new group, you need to assign the name and select the group type (SMS message / e-mail). You can leave the description empty and complete it later.

  You must assign at least one user to be able to save the new group.

- **Delete**

  Deletes the group selected in the table above.

  When you click the "Delete" button, two buttons are displayed as a prompt for confirmation:

  – Delete

    Deletes the selected group irrevocably.

  – Cancel

    Cancels the deletion and the normal picture of the WBM page is shown again.

You configure the individual groups below the table.

Change group

Select a group in the table with the mouse.

- **Name**

  Enter the group new name.

- **Description**

  As an option, you can enter a description of the group.

- **Group type**

  Using the drop-down list, you specify which message type the group will receive: SMS messages or e-mails

Specifying group members

Using the list of all configured users at the bottom of the page, you specify the members of the group selected in the table above.

Select the check box to the left of the user name to assign this user to the recipient group.

Make sure with individual users of groups of the group type "SMS" that the option "Allow receipt of SMS messages" is enabled in the relevant user configuration.

4.15 Operating mode

4.15.1 Operating modes

You will find the description of the Operating modesin the section Modes and operating modes (Page 12).

Note

Power consumption

Note that frequent update and communication cycles increase the power consumption of the RTU greatly. This applies in particular when permanently booked into the mobile wireless network.

Update mode

- **Basic cycle**

  From the drop-down list, specify the basic cycle (10 s .. 7 d) for updating the inputs and outputs.

  In every cycle, the RTU interrupts the sleep mode, reads the inputs, processes the program blocks and updates the outputs.

- **Start time of the update cycle**

  Synchronizes the update cycle with this time of day.

- **Start day of the update cycle**

  Synchronizes the update cycle with this day.

  The option is only available if "7 days" is configured as the basic cycle.

- **Additional update cycles**

  Using the drop-down list you specify whether in addition to every configured basic cycle 1 to 3 additional update cycles are run through to execute the program. In the additional cycles the program is executed.

  Reading the inputs and setting the outputs does not take place in the additional cycles but only after the basic cycle has elapsed.

  If you select "0" only the basic cycle is used.

Communication mode

In the cycle configured here, the RTU establishes a connection to its communications partner. In every cycle, the RTU interrupts the sleep mode and establishes the connection.

You configure the communications partner on the WBM page "TeleControl". There you will find further parameters for the transfer settings on the page of the protocol, being used.

A connection is always established by the RTU.

The time-of-day synchronization is performed with the communication cycle.

- **Always remain connected**

  If you enable this option, the RTU remains permanently booked into the mobile wireless network and connected to the communications partner.

- **Basic cycle**

  From the drop-down list, specify the basic cycle (10 minutes... 7 days) for communication.

- **Start time of the communication cycle**

  Synchronizes the communication cycle with this time of day.

  The communication mode starts with a lead time so that the RTU is reachable at the configured times. The lead time is made up of the following times:

  – 15 seconds (basic lead time for the configured mobile wireless interface)

  – + 45 seconds (with data service configured)

  – + 25 seconds (with OpenVPN service configured)

  If shortly before expiry of the minimum duration the connection still needs to remain established (e.g. sending an e-mail), the communication mode is extended by the required time.

- **Start day of the communication cycle**

  Synchronizes the communication cycle with this day.

  The option is only available if "7 days" is configured as the basic cycle.

- **Minimum duration**

  After connection establishment, the RTU first sends its stored frames (messages, event-related process data) to the partner. Under certain circumstances in mobile wireless networks it can take a while for a response from the partner to reach the RTU.

  So that the RTU does not terminate the connection too early without having received new data from the partner or without the OpenVPN connection being established, you can configure a waiting time here (30 s ... 10 min). After sending its own data, the RTU keeps the connection established for the duration of this waiting time.

  If you select "No" the RTU terminates the connection after sending its own data and receiving the acknowledgement from the partner, however at the earliest at the configured start time.

- **Start test communication mode**

  By clicking the button you can turn on the communication mode for test purposes, for example during commissioning.

Sleep mode

- Turn on mobile wireless interface regularly and check for receipt of wake-up SMS message?

  Using the drop-down list, you specify whether the RTU dials into the mobile wireless network in addition to the communication cycle to fetch any existing SMS messages. The following options are available:

  – No

    The RTU does not turn on the mobile wireless interface between the communication cycles.

  – 1 h .. 24 h

    Check cycle in which the RTU books into the mobile wireless network to fetch SMS messages.

  – Check permanently

    The RTU remains permanently booked into the mobile wireless network. Only with this setting can the RTU accept wake-up calls in sleep mode.

- Start time of checking cycle

  Time at which the checking cycle begins. Afterwards the checking cycles take place according to the setting of the parameter above.

Service mode

- Duration

  Using the drop-down list, you specify how long the RTU remains in service mode after pressing the "WKUP" button. The service mode, however, remains active until the last user has logged out of the WBM.

  In service mode the LAN interface and the LEDs are enabled.

4.15.2 Logging

You will find the naming conventions of the log files in the section SD card (Page 77).

- Active

  Selecting the check box turns on logging. A further requirement is a plugged in SD card.

- Log file creation

  Here you specify the cycle in which new log files are created: Daily, weekly, monthly

- **Response when insufficient memory space on SD card**

  Here you specify the response if there is no longer enough memory space on the SD card for new log files:

  – Delete older log files

    The process data continues to be acquired. When the SD card is full, with the creation of new log files the oldest log files are successively deleted (FIFO principle).

  – Stop logging

    Already stored process data is retained. When the SD card is full, saving new process data is suspended until data is deleted manually from the SD card.

- **Separator**

  Here, you specify the separate between the individual blocks of data in the log file: Comma, colon or semicolon

- **Log file name prefix**

  Here you can enter a name prefix with a maximum of three characters that is placed at the beginning of the file name of the log file.

- **Maximum number of Log files**

  Here you specify the maximum number of log files that will be saved on the SD card: Max. 999999

- **Send last log file by e-mail when a new one is created.**

  If the option is enabled, the last log file is sent as an attachment of an e-mail as soon as a new log file is created.

- **Recipient group**

  Here you select the recipient group for the e-mails with the log files.

  Configuration of the recipient groups in "Users / groups"

- **Subject**

  Here, select the subject of this e-mail.

  Configure the subject in "Tags" > "Texts"

- **Text**

  Here, select the text for this e-mail.

  Configure the text in "Tags" > "Texts"

- **Attachment zipped**

  If you enable the option, the attachment is sent compressed as a ZIP archive.

- **Change immediately to communication mode**

  If you select the option, the RTU changes immediately to communication mode as soon as a new log file is ready for sending.

4.15.3 Power supply

Power supply

Here you configure the various options for the power supply of the RTU, changing batteries, the power outputs of the RTU and possibly notifications.

External power supply

- **Connected**

  Enable the option if you supply the RTU with an external source of power.

Battery moduel 1 / Battery module 2

For the parameters of the battery modules, refer to the later section "Changing batteries" (see below).

- **Connected**

  Enable the option if you supply the RTU with one or two battery modules.

  Battery module 1 is the right module connected directly to the RTU.

  Battery module 2 is the second module that can be connected to the left of module 1.

- **Connect battery**

  By clicking the button, you connect the plugged in battery module logically with the RTU. Without the connection on this WBM page, the RTU does not access the physically plugged in battery module.

  This parameter is also used to trigger a message when a configurable operating time of the battery is reached (see below).

- **Disconnect battery**

  By clicking the button, you disconnect the plugged in battery module logically from the RTU. Without disconnecting on this WBM page, the RTU continues to access the physically plugged in battery module and the RTU enters a message in the diagnostics buffer when it physically disconnects.

Control outputs

- **Output voltage (X10 CTRL, X11, X40, X42)**

  From the drop-down list select the voltage (12 VDC or 24 VDC) at the voltage outputs of the RTU.

  The outputs X40 and X42 are always supplied with the voltage configured here.

  With the next three check boxes enable the voltage of outputs X10 and X11.

- **Supply X10 CTRL with voltage**

  If the option is enabled, X10 CTRL has the voltage configured above applied to it.

  If an external power supply exists and is available, the output CTRL X10 is always supplied by the external source.

- **Supply X10 CTRL from battery if external voltage fails.**

  If the option is enabled, X10 CTRL is supplied from the battery modules if the external power source fails. Note that this can involve increased power consumption.

  If the option is disabled, no voltage is applied to X10 CTRL if the external power source fails.

- **Supply X11 CTRL with voltage in update mode**

  If the option is enabled, X11 CTRL is supplied with the voltage configured above in update mode. Note that this involves increased power consumption.

  If the RTU is not in update mode, the outputs have no voltage applied.

  If the option is disabled, X11 CTRL never has a voltage applied.

- **X11: Lead time before update cycle (ms)**

  Here enter a value (ms) for a period during which the output X11 has voltage applied to it before the RTU changes to update mode. This value serves to damp down any voltage fluctuations at the inputs of the RTU when turning on X11.

- **Notifications**

  Using the drop-down list, select whether or not the RTU sends notifications as SMS messages or e-mails.

  Messages can be sent after the following events:

  – Reaching a configurable operating time of the battery

  – After changing over the battery module

- **Change immediately to communication mode**

  If you select the option, the RTU changes immediately to communication mode as soon as a named events occurs.

- **Recipient group**

  Here you select the recipient group for the messages.

  Configuration of the recipient groups in "Users / groups"

- **After battery operating time of:**

  If the option is enabled, a message is sent when the configured value of the operating time of the active battery module is reached after being enabled (parameter "Connect battery" see above).

- **Runtime (days)**

  Enter a value for the number of days after which the message is sent.

  If you enter 0, the function is deactivated.

- **Text**

  Here, select the text for this message.

  Configure the text in "Tags" > "Texts"

- **After battery changeover**

  This option only makes sense when using two battery modules.

  If the option is enabled, a message is sent when the RTU changes from one to the other battery module. The RTU changes from the active module to the second battery module (substitute module) when the voltage value of the battery of the active module sinks below a critical value.

  The advantage of this is that the active module can be completely emptied before switching to the second battery module and a message being sent. After sending the message there is normally enough time for a battery change and the capacity of the batteries is used to the full.

- **Text**

  Here, select the text for this message.

  Configure the text in "Tags" > "Texts"

Changing the battery

To change a battery, you first need to disconnect the module being used in the configuration. Follow these steps:

1. In the WBM, open the page. "Power supply".
2. Disconnect the battery module currently being used in the parameter group. "Battery module 1 / battery module 2".
3. Shut down the RTU to the safe status if you only use a single battery module and no external power supply. See section Operating status (Page 89) for information on this.

   If you use two battery modules or an external power supply, skip this point.
4. Openly battery module whose battery you want to change.

   For a battery change you do not need to separate the battery module from the RTU and do not need to take it from the DIN rail.

   Lift up the cover on the front of the module. To ensure a secure grip, there is a recess on the right-hand underside.
5. Release the connector of the battery.
6. Change the battery.
7. Plug the connector of the battery in the correct position in the socket in the battery module. The connector as reverse polarity protection.
8. Close the battery module.
9. Finally, connect the battery module in the WBM on the page "Power supply", see above.

Note the information on handling used batteries in the section Batteries: Replacement, recycling and disposal (Page 205).

4.15.4 Battery: Estimating the working life

Working life of the batteries

The power consumption of the RTU depends on many factors, the connected consumers, changing outdoor temperatures and above all on the frequency of configured events such as limits of measured values being exceeded. A precise calculation of the power consumption of the RTU is therefore not possible.

To estimate the power consumption of the RTU, you can list the frequency of the individual operating modes expected by you or configured and derive a rough value for the daily power consumption of the RTU from the specific consumptions.

You will find the electrical data in the section Technical data (Page 207).

The procedure in principle, is shown in the two following tables.

Note

Real values can significantly deviate from these.

Note that the numbers shown as an example below can deviate significantly from the real behavior of the RTU in daily use.

Calculate an adequate reserve.

Table 4- 2 Estimation of the power consumption of the battery per day

1	2	3	4	5	6
Status	**Current consumption (mA)**	**Capacity used per minute (Ah / min) ***	**Number of cycles per day**	**Status duration (minutes) per day**	**Ampere hours per day (Ah / d) ****
Sleep mode (basic consumption)	0.25	0.00000417		1421	0.0059
Update mode (assumption 0.5 minutes per cycle)	65	0.00108	24	12	0.0130
Communication mode (assumption 1.5 minutes per cycle)	192	0.00320	2	3	0.0096
Reserve (e.g. for service mode or events)	100	0.00167		4	0.0067
Sum of the capacity used per day (Ah / d)					**0.035**

* Value column 2 divided by (1000 times 60)

** Value column 3 times value column 5 - rounded

Table 4- 3 Estimation of the working life of a battery

Status	Value
Assumed capacity of the battery on starting (Ah)	16
Sum of the capacity used per day (Ah/d) (Value from the table above)	0.035
Estimated working life in days (Value row 1 / Value row 2)	**455**

When a configurable working life of the battery is reached, you can have the RTU send a message, see section Power supply (Page 114).

4.16 Tags

4.16.1 Overview

Overview

Table

In the overview table all tags are shown as symbols with identifiers. By clicking on a symbol. You can directly to the WBM page for configuring this tag type.

Symbols of unconfigured tags are gray, symbols of configured tags are green with different information.

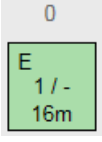

Figure 4-4 Example of the symbol of digital input 0

The information has the following meaning:

- Identifier
  - E = configured as an event counter (only digital input 0 or 1)
  - C = configured as consumption counter (only digital input 0 or 1)
  - L = Logging enabled

  In the example (graphic): Configured as an event counter, logging not enabled.

- x / y

  Frequency of the use of the address in the user program:

  – x = Use as an input

  – y = Use as an output

    Digits show the frequency of use.

    The minus sign means that no use as an output is possible.

  In the example (graphic): used once as input / cannot be used as output

  Among other things you can see here when an address is not used at all in the program.

- Update cycle

  The individually configured update cycle as the product of the basic cycle and reduction factor is displayed.

  In the example (graphic): 16 minutes

Update cycle

- Basic cycle

  The basic update cycle is displayed at the top right on the WBM page.

Copy of the process image

- **Save to PC**

  By clicking the button, you can save the current process image as a CSV file on the configuration PC.

4.16.2 Configuration of the tags , general parameters

Structure of the WBM pages for tags

The following WBM pages for the tags show a table at the top of the page with all available tags of the relevant type. The most important parameters are displayed for the configured tags.

Exceptions: For the internal temperature and the external power supply, you can only create one tag in each case. On these pages there is no table.

When you open a page in the lower area the parameters of the first tag are shown that you configure by making entries and selecting options.

Enabling and configuring tags

1. Click on a row in the table at the top of the WBM page
2. Assign the tag a meaningful name in the "Name" input box.
3. Configure the other necessary parameters and save your entries.

General parameters

Some often repeated parameters on the WBM pages of the tags are only described at this point.

Enabling and names of the tags

You need to configure the two following parameters for all tags except the tags for texts:

- **Active**

  If the option is enabled, the tag for productive operation is enabled.

  Unless it is enabled, the tag will not be processed in productive operation. (The tags for texts are always enabled.)

  To disable tags that are already enabled and integrated in the program, you first need to delete the use of the tag in the user program.

- **Name**

  Assign the tag a unique name.

  When using the communication protocol "TeleControl Basic" the tag names are included in the addressing of the OPC items.

  Note:
  In the listing of the data points (WBM page "TeleControl" > "Data points") an abbreviation for the tag type and the consecutive number are added to the tag name in brackets.
  Example of analog input 0: Fill level 1 (AI0)
  Example of digital input 2: High alarm 1 (DI2)

Logging

In the "Logging" parameter group, you specify whether and when the process data of the tags is stored on the SD card.

- **Logging**

  Options:

  – OFF

    The process data is never saved to the SD card.

  – Always

    The process data is saved with each update cycle

  – On change

    Process data is saved only when the signal changes

Format

The parameters in the parameter group. "Format" are optional and can be left empty.

Here, you specify strings for the individual tags, which are used when writing the process of values to the SD card and for transferring process values in messages (SMS messages / e-mails).

- **Parameters for digital tags (except counters):**
  - **Text for "ON"**

    Enter a text that replaces the value "1" of the process value (for example, "ON").
  - **Text for "OFF"**

    Enter a text that replaces the value "0" of the process value (for example, "OFF").
- **Parameters for analog tags and counters (inputs and memory bits):**
  - **Unit**

    Enter a text for the physical unit (for example, "l/s").
  - **Format**

    Here, you specify the format of the value to be written to the SD card or to be transferred with the message.

    With analog inputs the box has the default [V.2].

    With counters the box has the default [V].

    Note the following rules:

    The square brackets and the letter V R placeholders for the tag name. They must not be changed.

    The period and the digit following it indicate the number of decimal places (max. 4). If you write the values of a tag to the SD card only with 1 decimal point or want to transfer them with a message, configure the parameter as follows: [V.1]

    Example:
    In a message text the placeholder for the current value of analog input 3 with one decimal place would appear as follows: [Analog3.1]

  For information on programming messages with process values, refer to the section Blocks for messages (Page 192).

Syntax

Separate decimal places in input boxes with a period.

Note the characters permitted for the input boxes, see section String lengths and permitted characters (Page 64).

4.16.3 Digital inputs

In total, you can configure eight digital inputs.

Digital input 0 and 1 for counter inputs

Of the eight digital inputs only the first two can be configured as fast counter inputs up to 5 kHz. These two inputs have a fixed filter time of 0.2 milliseconds.

Digital input 2 to 7 for binary inputs

If you use the two inputs for binary digital inputs, note that under certain circumstances this can lead to bouncing effects. For binary digital inputs you should preferably use digital inputs 2 to 7.

Parameters

Depending on the configuration of the tags as counters or binary inputs, the parameters differ.

- **Active**
- **Name**
- **Type**

  Assign the tags to one of the following types:

  – Binary input

    The tag type is intended for binary inputs.

    Format: Bool (1 bit)

  – Event counter (max. 5kHz)

    The tag type is intended for counter inputs.

    Format: Integer without sign (32 bits)

  – Usage meter (max. kHz)

    The tag type is intended for usage metering in the positive range.

    Format: Floating-point number with sign (32 bits)
- **Filter time**

  Display of the filter time:

  – Digital input 0 .. 1: 0.2 ms

  – Digital input 2 .. 7: 6.4 ms
- **Initial value**

  Only with counters: Enter an initial value that the tag uses as a basic value.
- **Counter type**

  Only with event counters

  – Incremental

  – Decremental

- **Pulse weighting: amount**

  With usage meters, the parameter is used for the calculation to convert the sensor value to the process value (number of pulses per physical unit).

  Enter the amount that corresponds to the number of pulses specified in the row below.

- **Pulse weighting: number of pulses**

  With usage meters, the parameter is used for the calculation to convert the sensor value to the process value (number of pulses per physical unit).

  Enter the number of pulses to which the amount specified in the row above corresponds.

- **Current value**

  With event counters and binary inputs: Display of the value of the input

- **Current sensor value**

  Only with usage meters: Display of the value of the input

- **Current process value**

  Only with usage meters: Display of the physical value after converting the pulse weighting

- **Read**

  Click on the button to display the current value of the input.

- **Preset value**

  Optional with counters: You can write the the count value entered here to the tag.

- **Write**

  Optional with counters: Click the button to write the entered count value to the tag.

Update cycle

- **Reduction factor for basic cycle**

  The reduction factor lowers the update cycle for this input.

  With a factor for example of 2, the update cycle of this input is halved: The input is read only half as often as configured in the basic cycle. You configure the basic cycle in "Operating mode.

- **Additional update cycle on value change**

  Only with binary inputs

  – No

    The input is read only in the configured update cycle.

  – Yes, also in sleep mode

    The input is also read during the sleep mode.

    If the option is enabled, if a value changes during the sleep mode all digital inputs are read, the program is run through and the outputs updated.

    Note that with this setting, frequently changing signals can significantly increase power consumption.

Format

With counters:

- Unit
- Format
- Logging

With binary inputs:

- Text for ON
- Text for OFF
- Logging

See section Configuration of the tags , general parameters (Page 119).

See also

String lengths and permitted characters (Page 64)

4.16.4 Digital outputs / Digital memory bits

Digital outputs / Digital memory bits

Parameters

- Active
- Name
- Current value

  Display of the value of the output / memory bit
- Read

  Click on the button to display the current value.
- Preset value

  Optional: You can write the the value entered here to the tag.
- Write

  Click the button to write current preset value to the tag.

Format

- Text for ON
- Text for OFF
- Logging

See section Configuration of the tags , general parameters (Page 119).

4.16.5 Analog inputs

Analog inputs

The tags can be used for various analog signals (see "Measured variable / measurement type")

Data format: Floating-point number with sign (32 bits)

For the analog input AI0 it is possible to configure running through additional update cycles during the sleep mode of the RTU, see parameter "Update on value change in sleep mode".

The inputs X41/0 and X41/1 measure at the same time, the inputs X43/0 and X43/1 following this and one after the other. It is recommended to place measurements with large settling times on connectors X41/0 and X41/1 to keep the update time and the power consumption of the RTU low.

Parameters

- Active
- Name

Measure

- Measured variable / measurement type

  and

- Output signal / measuring range

  Select the required measured variable (measurement type) and the required output signal or the temperature measuring range:

  – Voltage

    0 .. 5 V

    0 .. 10 V

  – Current (2-wire connector)

    4 .. 20 mA

  – Current (4-wire connector)

    0 .. 20 mA

    4 .. 20 mA

  – Temperature (Pt1000)

    -80 .. +140 °C

    -112 .. +284 °F

- **Power supply**

  If you want to supply the sensor with voltage from the RTU, select the option "ON". The voltage X40 and X42 can only be turned on with a lead time before every update cycle. The lead time is formed from the settling time and integration time times the smoothing factor.

  With current sensors the option is preset with "ON".

- **Settling time of the sensor (ms)**

  The settling time is the time the sensor requires to return a stable measured value after turning on the power supply.

  Range of values: 0 .. 30000 ms

  The sum of the settling time and integration time multiplied by the smoothing factor must not exceed the time of the update cycle (basic cycle multiplied by reduction factor).

- **Integration time of the sensor (ms)**

  The integration time is used to match the sampling time of the input of the RTU with the conversion of time of the sensor.

  From the drop-down list, select a time that comes closest to the integration time (or conversion time) of the sensor. If you do not know the integration time of the sensor, select the lowest value.

  Note that high integration times increase the power consumption of the RTU.

  Range of values:

  – 40 ms

  – 100 ms

  – 250 ms

  Note the effect of the integration time on the formation of the output signal of the tag, see "Smoothing".

- **Smoothing**

  With this parameter the signal read in is smoothed in every update cycle by reading the applied signal several times. The individual values are read at intervals of the integration time configured above.

  The selectable smoothing degrees (see range of values) correspond to different smoothing factors. The smoothing factor decides how often the analog value is read in every update cycle. Example: With smoothing degree. "Weak" the input is read four times.

  From the individually read values, the mean value is formed which is written to the process image via the output parameter of the tag. This value is then used for further processing by the program and for saving or transfer to the communications partner.

Range of values:

– None

  Smoothing factor 1

– Weak

  Smoothing factor 4

– Medium

  Smoothing factor 16

– Strong

  Smoothing factor 32

- **Current sensor value**

  Display of the value of the input signal

- **Read**

  Click on the button to display the current value of the input.

- **Current process value**

  Display of the physical value that is calculated after configuration of the measuring range (see below).

- **Cable error correction**

  Only for temperature measurement

  Select an option from the drop-down list:

  – No

    The measured value is not corrected by the cable resistance.

  – Indication of the resistance

    If you select this option, an input box for entering the cable resistance is displayed.

    Enter the measured or calculated cable resistance. Based on the cable resistance entered, the RTU corrects the measured value. More

  – Indication of the cable data

    If you select this option, three input boxes for entering the following parameters of the laid cable are displayed.

    - Specific resistance (Ω*mm^2/m)

    - Cable length (m)

      (simple length)

    - Cable cross section (mm^2)

    Based on this information, the RTU calculates the cable resistance and corrects the measured value.

Specification of the measuring range

To specify the measuring range enter the lower interpolation point (interpolation point 1) and the upper interpolation point (interpolation point 2) for the input signal (sensor value) and the corresponding physical value (process value).

- **Sensor value (interpolation point 1)**

  Low value of the input signal
- **Process value (interpolation point 1)**

  Corresponding low value of the physical value
- **Sensor value (interpolation point 2)**

  High value of the input signal
- **Process value (interpolation point 2)**

  Corresponding high value of the physical value
- **Process value, range**

  Displays the configured process value range

Logging

See section Configuration of the tags , general parameters (Page 119).

The option whether and when process data of the signal is saved on the SD card, also applies here for saving the mean value, if mean value formation was enabled in the parameter group. "Additional value".

Additional value

- **Mean value generation**

  Select a degree of mean value generation over several update cycles:
  - None

    No mean value generation
  - Weak

    Mean value generation over 2 cycles
  - Medium

    Mean value generation over 4 cycles
  - Strong

    Mean value generation over 8 cycles

Diagnostics messages

- Wire break

  If wire break is detected at life-zero inputs, if the option is enabled a message is entered in the diagnostics buffer

  With other measured variables, the option has no effect.

- Outside the measuring range

  If the option is enabled, a message is entered in the diagnostics buffer when under/overvoltage or under overcurrent is detected.

  With temperature measurements, the option has no effect.

  For over/undershoot ranges or over/underflow, refer to the section "Measuring ranges".

Regardless of configured diagnostics messages, the LED of an input (Aix) is lit red with wire break, over/undervoltage or under/overcurrent.

Update cycle

- Reduction factor for basic cycle

  The reduction factor lowers the frequency of the update cycle for this input. The interval between the update cycles is therefore increased.

  Example: With a basic cycle of 10 seconds and a reduction factor of 2, the frequency of the update cycle for this input is halved, the input is read only every 20 seconds.

  You configure the basic cycle in "Operating mode.

  Note the comments made about the parameters "Settling time" and "Integration time".

- Update on value change in sleep mode

  Only with analog input AI0.

  – Deactivated

    The input is read only in the configured update cycle.

  – Activated

    The input is also read during the sleep mode if the value at the input changes (see "Value change"). If AI0 is read, the analog inputs configured as counters will be read at the same time. With every cycle, the inputs mentioned earlier are read, the program is executed and the outputs are set.

    After reading the outputs of these tags are written, the program is run through and the outputs updated. Note that with this setting, frequently changing signals increase power consumption.

  The difference of the value change as of which an additional update cycle is run through is configured following this.

- Value change(%)

  Amount of the change (2.5.. 50%) of the currently red value compared with the process value range (100% of the process value). If this amount is exceeded, and additional update cycle is run through.

Downsizing of the reduction factor on value change

With these options, you can reduce the duration of the update cycle for particular situations. The following factor applies only in the following situations. It is configured independently of the reduction factor for the usual operation (parameter "Reduction factor for basic cycle", see above). As soon as the value of the analog input no longer meets the following conditions, there is a changeover to the standard reduction factor again.

The "Downsizing of the reduction factor on value change" is made possible in the following situations:

- The process value is below a low threshold.
- The process value is above a high threshold.
- The process value changes more than a configurable percentage compared with the last value read.

The factor for the duration of the update cycle is configured below this. One, two or all three conditions can be configured.

- **Activate threshold**

  When you enable the option, you enable the three following conditions for reducing the duration of the basic cycle. You can enable the conditions independently of each other.

- **Low threshold (process value)**

  If the process value goes below the low threshold, the basic cycle is run with the reduction factor that can be configured below instead of with the standard reduction factor.

- **High threshold (process value)**

  If the process value exceeds the high threshold, the basic cycle is run with the reduction factor that can be configured below instead of with the standard reduction factor.

- **Value change**

  Percentage change compared with the last read value as of which the basic cycle runs with the factor that can be configured below instead of with the standard reduction factor.

- **Reduction to:**

  Downsized reduction factor for the three situations listed above

- **Reduced update cycle**

  Here, the update cycle resulting from using the factor is displayed.

Format

- **Unit**
- **Format**

See section Configuration of the tags , general parameters (Page 119).

Measuring ranges

The analog inputs have a resolution of 12 bits.

In the presentation of the measuring range, the RTU distinguishes between:

- Nominal range

  Range of the upper calibrated measuring range
- Overshoot range / undershoot range

  Measuring range exceeded / undershot with diagnostics message "INFO"
- Overflow range / underflow range

  Error ranges that cause a diagnostics message "WARNING" for example, if there is a wire break in life zero inputs.

Range	Measuring range (sensor)					Measuring range (percentage)
	0 .. 5 V (unipolar)	0 .. 10 V (unipolar)	0 .. 20 mA (unipolar)	4 .. 20 mA (life zero)	Temperature	
Overflow	≥ 5.25 (max.5.399)	≥ 10.5 (max.10.799)	≥ 21 (max.21.027)	≥ 21 (max.21.027)	≥ 151 °C ≥ 303,8 °F	≥ 105 %
Overshoot range	> 5 .. < 5.25	> 10 .. < 10.5	> 20 .. < 21	> 20 .. < 21	140.1 .. < 151 °C 284.1 .. < 303.8 °F	100.025 .. < 105 %
Nominal range	0 .. 5	0 .. 10	0 .. 20		-80 .. +140 °C -112 .. +284 °F	0 .. 100 %
Nominal range				4 .. 20		20 .. 100 %
Undershoot range	-	-	-	< 4 .. > 1		< 20 .. > 5 %
Undershoot range	-	-	-		-80.1 .. -91 °C -112.1 .. -131.8 °F	-0.025 .. -5 %
Underflow range / wire break	-	-	-	≤ 1		≤ 5 %
Underflow range	-	-	-		≤ -91 °C ≤-131.8 °F	≤ -5 %

4.16.6 Analog memory bits

Note the characters permitted for the input boxes, see section String lengths and permitted characters (Page 64).

Analog memory bits

Parameters

- Active
- Name

- **Type**

  Assign the tags to one of the following types:

  – Analog value

    The tag type is intended for analog signals.

    Formats of the tags: Floating-point number with sign (32 bits)

  – Counter

    The tag type is intended for counter inputs.

    Formats of the tags: Integer without sign (32 bits)

- **Initial value**

  Optional: Enter an initial value that the tag uses as a basic value.

- **Current value**

  Display of the current value of the tag

- **Read**

  Click on the button to display the current value of the tag.

- **Preset value**

  Optional: You can write the the value entered here to the tag.

- **Write**

  Click the button to write current preset value to the tag.

Format

- **Unit**
- **Format**
- **Logging**

See section Configuration of the tags , general parameters (Page 119).

4.16.7 Temperature (Internal)

Note the characters permitted for the input boxes, see section String lengths and permitted characters (Page 64).

Temperature (Internal)

Parameters

- **Active**
- **Name**
- **Temperature unit**

  Select the physical unit for the internal temperature.

- **Current value**

  Display of the value of the tag

- **Read**

  Click on the button to display the current value of the tag.

Update cycle

- **Reduction factor for basic cycle**

  The reduction factor lowers the frequency of the update cycle for this input, the intervals between update cycles increase.

  You configure the basic cycle in "Operating mode.

Diagnostics messages

If the internal temperature of the RTU exceeds a configurable high limit or undershoots a low limit, a message "WARNING" is entered in the diagnostics buffer.

You will find the permitted range for the ambient temperature of the RTU in the section Technical data (Page 207).

- **Low limit**

  Enable the option if undershooting a low limit should cause a diagnostics message to be generated. Enter the limit in the input box.

- **High limit**

  Enable the option if exceeding a high limit should cause a diagnostics message to be generated. Enter the limit in the input box.

- **Logging**

  See section Configuration of the tags , general parameters (Page 119).

4.16.8 Power supply (external)

Note the characters permitted for the input boxes, see section String lengths and permitted characters (Page 64).

Power supply (external)

Parameters

- **Active**
- **Name**
- **Current value**

  Display of the value of the tag

- **Read**

  Click on the button to display the current value of the tag.

Update cycle

- **Reduction factor for basic cycle**

  The reduction factor lowers the frequency of the update cycle for this input, the intervals between update cycles increase.

  You configure the basic cycle in "Operating mode.

Diagnostics messages

If the voltage value of the external power supply of the RTU undershoots a configurable minimum permitted value, a message "WARNING" is entered in the diagnostics buffer.

- **Minimum voltage**

  Enable the option if undershooting a low voltage limit should cause a diagnostics message to be generated. Enter the value in the input box.

  The minimum permitted voltage value of the RTU is 10.8 V.

- **Logging**

  See section Configuration of the tags , general parameters (Page 119).

4.16.9 Battery

Note the characters permitted for the input boxes, see section String lengths and permitted characters (Page 64).

You configure the sending of messages if a configurable operating time of the battery is exceeded on the WBM page "Operating mode" > "Power supply".

Battery

Parameters

- **Active**
- **Name**
- **Current value**

  Display of the value of the tag

- **Read**

  Click on the button to display the current value of the tag.

Update cycle

- Reduction factor for basic cycle

  The reduction factor lowers the frequency of the update cycle for this input, the intervals between update cycles increase.

  You configure the basic cycle in "Operating mode.

- Logging

  See section Configuration of the tags , general parameters (Page 119).

4.16.10 Texts

Note the characters permitted for the input boxes and the syntax of the placeholders, see section String lengths and permitted characters (Page 64).

Texts

Up to 20 texts can be configured.

- Add

  Click the button to create a new text tag.

- Delete

  First select a text in the table and then click "Delete" to delete this text tag.

  A prompt for confirmation appears.

  – Delete

    Click "Delete" to delete the tag irrevocably.

  – Cancel

    Click "Cancel" if you do not want to delete the tag. The normal view of the WBM page appears again.

Change text

- Name

  Name of the tag

- Text

  Enter the text here that will be transferred with the message.

- Number of characters

  Shows the current number of characters being used in the text

Notes on the texts

Maximum text length

The text length is limited to 160 characters. Spaces and line breaks count as characters.

If you enter more than 160 characters in the input box, when you save ("Apply") an error message will be output and you need to shorten the text.

Using placeholders for process data

Within a text, you can use up to six placeholders for current values of tags. In the body of the text of the message, the current values are transferred.

The placeholders are identified by square brackets.

The following placeholders are available:

- [V.x]

  Placeholder for the decimal value of a tag.

  – V is the placeholder for the tag name.

    "V" must be replaced in the text by the configured name of the tag.

  – The period and the digit following it are optional indicate the number of decimal places.

  Examples of placeholders in the message text:

  – The placeholder for the value of analog input AI3 with the name "Flow" without decimal places would appear as follows: [Flow]

  – The placeholder for the value of analog input AI4 with the name "Fill level" with one decimal place would appear as follows: [Fill level.1]

- [DATE]

  Current date. Format: yyyy-mm-dd

- [TIME]

  Current time. Format: hh:mm:ss

- [V.T]

  Placeholder for a numeric value that is output as a period of time. (resolution: seconds)

  Format: hhhh:mm:ss

- [V.T2]

  Placeholder for a numeric value that is output as a period of time. (resolution: hundredths of seconds)

  Format: hhhh:mm:ss.ss

- [DEVNAME]

  Placeholder for own station name

SMS: Text length when using the placeholders for process data

With SMS messages, note that the process values can consist of more characters than the placeholders in the configured text.

If due to the embedding of process data, the text of the SMS message to be transferred exceeds the maximum length of 160 characters, the SMS text is truncated to 160 characters and the rest of the text is sent in a second SMS message.

Texts for e.mails

With e-mails, the use of text tags for the subject and for the message text is different.

- **Different texts for subject and message text**

  If you want to use different texts for the subject and the message text, and if this is supported by the configurations, you can create two text tags.

  The use of different texts for subject and message text is supported in the following situations:

  – Programming e-mails via program blocks (WBM page "Program" > "Send e-mail")

  – The sending of e-mails with log files (WBM page "Operating mode" > "Logging")

- **Same texts for subject and message text**

  For the following e-mails only one text tag can be used both for the subject and for the message text:

  – Notifications about the operating time of a battery or changing over battery modules (WBM page "Operating mode" > "Power supply")

  Configuration options:

  If after a couple of words you insert a line break (<Enter>) and continue writing in the next line, you can avoid the entire text being written in the subject. This has the following effect:

  – In the subject of the e-mail, the text is cut off as of the line break because line breaks cannot be processed in the subject box.

  – In the message text of the e-mail, the entire text, including the line break is transferred.

4.17 Program

4.17.1 Creating the user program using program blocks

Creating the program using program blocks

For the control tasks of the RTU, you will find prewritten program blocks that you can create and program here in the WBM in up to 8 networks.

You will find a description of commonly used block parameters and parameter settings in the section Often used parameters (Page 158). The specific parameters of the individual program block types are described in the following sections.

4.17.2 Overview of the program blocks

Overview of the program blocks

The following program blocks are available

- **Blocks for logical functions**
  - Logical AND (Page 161)
  - Logical OR (Page 162)
  - Exclusive OR (XOR) (Page 163)
  - Logical NOT (Page 164)
- **Blocks for time functions**
  - On delay (Page 165)
  - Off delay (Page 166)
  - On / Off delay (Page 167)
  - Retentive on delay (Page 168)
  - Pulse generator (Page 170)
  - Random on/off delay (Page 170)
  - Year timer (Page 171)
  - Week timer (Page 174)
  - Astronomical clock (Page 175)
- **Blocks for analog value functions**
  - Triggered saving (Page 176)
  - Threshold value switch (Page 177)
  - Analog value comparator (Page 179)
  - Analog value monitoring (Page 180)
  - Min. /Max. /Mean value (Page 181)
  - Addition (Page 183)
  - Subtraction (Page 183)
  - Multiplication (Page 184)
  - Division (Page 185)

- **Counter blocks**
  - Counters (Page 186)
  - Elapsed time counter (Page 188)
  - Frequency counter (Page 189)
  - Flow measurement (Page 190)
- **Blocks for messages**
  - Sending SMS messages (Page 192)
  - Send e-mail (Page 193)
- **Relay blocks**
  - Latching relays (Page 195)
  - Current impulse relay (Page 197)

For a description of the blocks, refer to the section Programming (Page 157).

4.18 Telecontrol

4.18.1 Overview

Overview

The Overview displays the most important parameters of communication with the partner and statistical data on the send buffer of the RTU.

Telecontrol status

The following information is shown:

- **Protocol type**

  Protocol used for the mobile wireless connection to the communications partner in the master station
- **Connection exists to TCSB /**
  Connection exists to the master

  Indicates whether or not a connection to the communications partner exists.
- **Address of the telecontrol server /**
  Address of the master station

  Configured IP address or host name of the communications partner in the master station
- **Connected since (dd:hh:mm:ss)**

  Duration of the existing connection to the communications partner

Send buffer

Here, data on the memory occupation of the send buffer (frame memory) of the RTU is displayed.

The values of tags configured as an event are saved in the send buffer. You specify whether a tag is transferred as an event on the page "TeleControl" > "Data points" via the "Type of transfer " (TeleControl Basic) or . die "Event class" (DNP3 / IEC).

- **Send buffer - current level**

  Current fill level of the send buffer

- **Send buffer - average level**

  Average fill level of the send buffer over the last 16 communication cycles

  Data transferred by events is not taken into account here

- **Send buffer - highest level**

  Highest fill level of the send buffer reached since the last startup of the RTU.

- **Number of lost frames**

  Number of frames that due to connection disruptions or a full send buffer could not be sent since the last startup of the RTU.

- **Reset statistics**

  Resets all the counters on this page to zero.

4.18.2 TeleControl Basic

Here you configure the data of the communications partner of the RTU (telecontrol server) and the transfer settings for connection establishment.

Parameters

The following data needs to be configured:

- **Active**

  Enable the option to enable the communication between the RTU and its communications partner.

- **IP address or DNS name of the telecontrol server**

  IP address or host name of the communications partner in the master station

- **Port number**

  IPT listener port of TCSB

  Range of values: 1024 .. 65535

  With TCSB the port number 55097 is preset but can be changed.

- **Project number**

  Number of the TCSB project

  Range of values: 1 .. 2000

- **Station number**

  Number of the connection in TCSB

  Range of values: 1 .. 8000

  Range of values in TCSB: 1...8000 (throughout the entire TCSB system)

  With connections between different RTUs and TCSB, the station number within a project must be different for every RTU.

- **Telecontrol password**

  Password for authentication of the RTU with TCSB. Is configured in TCSB for every station.

  Rules: 8 .. 29 characters from the ASCII character set 0x20.. 0x7E

Transmission settings

A connection establishment fire the mobile wireless network can take several seconds. This depends on the particular network, on the current network load and on any maintenance work of the network provider.

If the telecontrol server is unreachable, the RTU repeats its attempts to establish a connection to the telecontrol server.

- Connection establishment delay

  The parameter decides the intervals between attempts to establish the connection if the partner is unreachable.

  The calculation is based on the basic value for the waiting time between connection establishment attempts of the RTU. The resulting intervals between connection establishment attempts depend on the parameter "Always remain connected" that is configured in the settings of the operating mode, see section Operating modes (Page 110).

  – Parameter "Always remain connected" enabled

    A basic value is configured for the waiting time before the next connection establishment attempt. Starting at the basic value, the current value is doubled in each case after 3 unsuccessful retries up to a maximum value of 900 s. Range of values for the basic value: 10 to 600 s.

    Example: The basic value 20 results in the following intervals for connection establishment attempts:

    three times 20 s

    three times 40 s

    three times 80 s

    etc. up to max. 900 s

  – Parameter "Always remain connected" disabled

    If the option "Always ready to receive" is disabled, within a basic cycle a maximum of three connection establishment attempts with a fixed waiting time of 10 seconds are performed.

  The parameter has a default basic value of 10 seconds.

- Send monitoring time

  Time for the arrival of the acknowledgment from the communications partner (Telecontrol server) after sending unsolicited frames. The time is started after sending an unsolicited frame. If no acknowledgement has been received from the partner when the connection monitoring time elapses, the frame is repeated up to three times. After three unsuccessful attempts, the connection is terminated and re-established.

  The parameter has a default value of 5 seconds.

- Key exchange interval

  This is the interval in hours after which the key is exchanged again between the RTU and the communications partner (TCSB). The key is a security function of the protocol "TeleControl Basic" used by the RTU and TCSB.

  The parameter has a default value of 1 hour.

4.18.3 DNP3

Here you configure the data of the communications partner of the RTU (master) and the transfer settings for connection establishment.

Parameters

The following data needs to be configured:

- **Active**

  Enable the option to enable the communication between the RTU and its communications partner.

- **Master address**

  IP address of the master

  If you configure "0.0.0.0" the RTU accepts a master with any IP address.

  If the address of the master is configured with 0.0.0.0, the address of the substitute master must also be configured with 0.0.0.0.

- **Address of the substitute master**

  If a second master exists (optional): IP address of the substitute master

  If the address of the master is configured with 0.0.0.0, the address of the substitute master must also be configured with 0.0.0.0.

- **Port number**

  Number of the listener port of the RTU

  Range of values: 1024 .. 65535

- **Station number**

  Outstation number of the RTU

  Range of values: 0 .. 65519

- **Master station number**

  Station number of the master

  Range of values: 0 .. 65519

Save values acc. to event classes

- **Class 1 / Class 2 / Class 3**

  Here you specify how the values of data points assigned as an event of class 1, 2 or 3 are saved.

  The following options are available for each of the three classes:

  – Every value

    Every value change is saved in the send buffer.

  – Current value

    Only the current value at the time the tag is read is saved in the send buffer and overwrites the last saved value there.

  You configure the data points as an event of a specific class on the WBM page Data points (Page 146).

Buffer for events (send buffer)

- **Class 1 / Class 2 / Class 3**

  Here, for each of the three event classes you specify the maximum number of events that can be stored in the send buffer before they are sent to the communications partner.

  Range of values: 0 .. 255

  If you enter zero, the function is deactivated for the relevant class. As many events can be stored for the class as the overall size of the send buffer or a configured Delay time for events allows.

  Note the overall size of the send buffer, refer to the section Performance data (Page 23).

Delay time for events

- **Class 1 / Class 2 / Class 3**

  Here, for each of the three event classes you specify the maximum time the events can be stored in the send buffer before they are sent to the communications partner. Time in seconds.

  If you enter zero, the function is deactivated for the relevant class. As many events can be stored for the class as the overall size of the send buffer or a configured buffer for events allows.

If the value zero is set for the buffer for events and for the delay time for events, both functions are disabled and no events are transferred unsolicited.

4.18.4 IEC 60870-5

IEC 60870-5

Here you configure the data of the communications partner of the RTU (master) and the transfer settings for connection establishment.

Parameters

The following data needs to be configured:

- **Active**

  Enable the option to enable the communication between the RTU and its communications partner.

- **Master address**

  IP address of the master

  If you configure "0.0.0.0" the RTU accepts a master with any IP address.

  If the address of the master is configured with 0.0.0.0, the address of the substitute master must also be configured with 0.0.0.0.

- **Address of the substitute master**

  If a second master exists (optional): IP address of the substitute master

  If the address of the master is configured with 0.0.0.0, the address of the substitute master must also be configured with 0.0.0.0.

- **Port number**

  Number of the listener port of the RTU

  Range of values: 0 .. 65535

- **Common ASDU address**

  Station address of the RTU

Transmission settings

Note

Settings on the master

When configuring the monitoring times t_1 and t_2 make sure that you make the corresponding settings on the master so that there are no unwanted error messages or connection aborts.

- **t_1**

  Message monitoring time:

  Monitoring time for the acknowledgement of frames sent by the RTU by the master. The monitoring time applies to all frames sent by the RTU in I, S and U format.

  If the partner does not send an acknowledgment during the monitoring time, the RTU terminates the connection to the partner.

  Permitted range: 1 .. 65535 s

  Default setting: 15 s

- t_2

  Monitoring time for S and U frames

  Monitoring time for the acknowledgment of data frames of the master by the RTU.

  After receiving data from the master, the RTU acknowledges the received data as follows:

  – If the RTU sends data to the master itself within t_2, it acknowledges the data frames received from the master during t_2 at the same time along with the sent data frame (I format).

  – The RTU sends an acknowledgment frame (S format) to the master of the latest when t_2 elapses.

  Permitted range: 0 .. 65535 s

  Default setting: 10 s

  If you enter 0 (zero), the function is deactivated.

  The value of t_2 must be less than that of t_1.

  Note

  Values for the frame monitoring time and monitoring time for S and U frames

  With a high encryption depth of the VPN connection higher values for t_1 - t_2 (e.g. 60 s) may be necessary if the communication mode "Always remain connected" is configured.

- t_3

  Idle time for test frames

  Monitoring time during which the RTU has not received any data from the master. This parameter is intended for situations in which longer idle periods occur; in other words, times when there is no data traffic.

  When t_3 elapses, the RTU sends a test/control frame (U format) to the master and enters a message in its diagnostics buffer.

  Permitted range: 0 .. 65535 s

  Default setting: 30 s

  If you enter 0 (zero), the function is deactivated.

  The value of t_3 should be higher than that of t_1.

- w

  Maximum number of received data frames (I-APDUs), after which the oldest received frame must be acknowledged.

  Permitted range: 1 .. 65535

  Default setting: 8

- k

  Maximum number of unacknowledged data frames (I-APDUs)

  If k is reached and t_1 has not yet elapsed, the RTU does not send any frames until all sent frames have been acknowledged by the master.

  When k is reached and t_1 has elapsed, the TCP connection is terminated.

  Permitted range: 1 .. 12

  Default setting: 12

Acknowledgment

Mechanism:

With each sent data frame, the RTU sends a continuous send sequence number. The data frame remains initially stored in the send buffer.

When it receives the data frame, the master sends the send sequence number from this or (if several frames are received) the last frame as an acknowledgement to the RTU. The RTU saves the send sequence number returned by the master as a receive sequence number and uses it as an acknowledgement.

Frames whose send sequence number is equal to or lower than the current receive sequence number are evaluated as having been successfully transferred and are deleted from the send buffer of the CP.

Recommendations of the specification:

w should not be higher than 2/3 of k.

Recommended value for k: 12

Recommended value for w: 8

4.18.5 Data points

Processing of process data

Data points

When processing process data, the inputs and outputs are processed by the program and saved in the address areas input, output and bit memory of the RTU. The individual addresses are mapped and addressed as data points for the communication. The data points are processed one-to-one in the control system.

In the IEC protocol, the data point corresponds to an information object.

Below you will find a table with the data types of the addresses and the assigned data point types.

There are two classes of data points:

- Static data points

  The values of these data points are saved in the image memory of the RTU. A newly read in value of a tag overwrites the last value saved. The values are only transferred after being called up by the communications partner.

- Events

Saving events in the send buffer

The send buffer is the frame memory for the values of events.

Note the overall size of the send buffer, refer to the section Performance data (Page 23).

The send buffer works chronologically: The oldest frames are sent first (FIFO principle) and deleted from the send buffer if the transfer was successful. When the maximum number of events is reached and the frames cannot not be sent, new values of events are discarded.

Triggering the saving of events

The saving of the values of analog data points configured as an event is triggered by a threshold value trigger, see below (parameter "Threshold"). This means that not every value of an analog event data point read is saved.

With digital data points, each change is handled as an event.

Transmission mode

The transfer of the events to the communications partner can be triggered immediately (unsolicited) or after intermediate buffering, refer to "Transmission mode".

Data points

Table rows

In the table all configured tacks are shown as data points grouped according to tag types.

- **Data points for the read direction**
  - Digital inputs

    Apart from the configured tags here you will find two status bits for error messages (STATUS_ERROR) and for the operating status of the RTU (STATUS_RUN) that can be read by the communications partner.
  - Analog inputs
  - Counter inputs

    These are event counters (DI0 and/or DI1) and analog memory bits configured as counters.

- **Data points for the write direction**

  For the values that the communications partner writes in the process direction, the following tag types are available:

  – Digital outputs

  – Analog outputs

    These are analog memory bits configured as an analog value.

    Analog memory bits configured as counters cannot be written.

The data points of the protocols "TeleControl Basic" and "IEC" can be used both in the read direction (in) and the write direction (out).

Table columns

The parameters of the column headers have the following meaning.

- **Name**

  Configured name of the tag

  After the tag name, there is an abbreviation for the tag type and the consecutive member of the tag added in brackets, for example (AI0) or (DQ3).

- **Data point name**

  Only with the "TeleControl Basic" protocol:

  The data point name is part of the addressing by the communications partner (addressing of the OPC items).

- **Data point type**

  Type of the data point.

  With the "DNP3" and "IEC" protocols, the data point type corresponds to the following elements:

  – DNP3: Object class and variation

  – IEC: Type identification

- **Type of transmission**

  Only with the "TeleControl Basic" protocol:

  Here you specify whether the values of the data point are configured as an event. The following options are available:

  – Only internal use

    The values of the data point are not transferred to the communications partner.

  – Transfer after call

    The current value of the data point is saved on the RTU. New values of a data point overwrite the last stored value.

    Only after being called up by the communications partner or at the configured times of the communication mode is the value current at this time transferred.

- Event (only current value)

  Only the current value is saved and overwrites the last value saved there.

- Event (every value)

  All values that differ from the last saved value are saved in chronological order.

- **Event class** - with the "DNP3" protocol

  Here you specify whether the values of the data point are configured as an event. The following options are available:

  - Only internal use

    The values of the data point are not transferred to the communications partner.

  - Class 0

    Static data point (not an event)

  - Class 1 / Class 2 / Class 3

    Configuration of the data point as an event of class 1, 2 or 3

  The characteristics of classes 1, 2 and 3 are specified within the DNP3 system. The evaluation of the classification of the frames from the stations is handled by the master.

- **Event class** - with the "IEC" protocol

  Here you specify whether the values of the data point are configured as an event. The following options are available:

  - Only internal use

    The values of the data point are not transferred to the communications partner.

  - Static

    Static data point (not an event). The current value is only transferred after being called up by the partner.

  - Event (every value)

    Each value change is saved in chronological order.

  - Event (only current value)

    Only the current value at the time it was acquired is saved and overwrites the last value saved there.

- **Index**

  Only with the "TeleControl Basic" and "DNP3" protocols

  - With the "TeleControl Basic" protocol, the data point index is not used for addressing but serves as an internal organization criterion.

  - With the "DNP3" protocol, the data point index is used for addressing.

  The value has a default in the system, but can be changed. Remember the rules for configuration below in the section "Configuration of the index".

- **Address of the information object**

  Only with the "IEC" protocol:

  The data point address is used for addressing.

  The value has a default in the system, but can be changed. Remember the rules for configuration below in the section "Configuration of the index".

- **Threshold**

  The threshold is the difference between the currently read value and the last saved value of a data point that is configured as an event.

  Reaching the threshold value triggers the saving of the current value.

  You can configure the threshold value as a percentage (%) or as an absolute value (abs.).

  If you make an entry in one of the two boxes (% or Abs.) the other box is shown with an underlying color. This serves as a request to check the entered or changed value. When you save, the underlying color is removed.

  – Threshold (%)

    Threshold value as a percentage

  – Threshold (abs.)

    Threshold value as an absolute value

  With the usage meters (DI) and the analog memory bits configured as counters, the threshold can only be specified as an absolute value.

- **Transmission mode**

  The parameter serves to specify whether the values of a data point are saved until the next transfer to the partner or sent unsolicited to the partner.

  When using the "DNP3" protocol, the transfer mode. "Unsolicited transfer" is configured by entering 0 (zero) for the parameter "Buffer for events (send buffer)", see section 4DNP3 (Page 142)

  With the "TeleControl Basic" and "IEC" protocols, the following options are available:

  – Buffered transfer

    The values are stored intermediately and transferred to the partner only the next time a connection is established to the partner or within the framework of the next response.

    With data points of the class 0 or "Static", the boxes are grade out since these values must not be sent unsolicited.

  – Unsolicited transfer

    The values are transferred immediately.

Configuring the index

For the configuration of the data point index (or the address of the information object in IEC) the following rules apply.

- **TeleControl Basic**

  Range of values: 0 .. 65535

  – Input

    The index of a data point of the type input must be unique throughout all data point types (digital inputs, analog inputs etc.).

  – Output

    A data point of the type output can have the same index as a data point of the type input.

- **DNP3**

  Range of values: 0 .. 65534

  – A data point must have the same index in the station and in the master.

  – The indexes of two data points in different object groups can be identical.

  – Data point indexes must be unique within one of the following object groups:

    - Binary Input / Binary Input Event

    - Binary Output / Binary Command

    - Counter / Counter Event

    - Analog Input / Analog Input Event

    - Analog Output

- **IEC**

  Range of values: 0 .. 16777215

Doubly assigned indexes (addresses) and indexes outside the permitted range of values are signaled as errors during the consistency check and prevent saving.

Signal types, data types and data point types of the RTU

Table 4- 4 Signal types, data types, data point types

Signal type (configured as)	Data type: Format (length in bits)	Supported data point types		
		TeleControl Basic *	DNP3 Object group [variation] **	IEC *
Digital input	Bool (1)	Digital input 1 Bit	Binary Input 1 [1, **2**] Binary Input Event 2 [1, **2**, 3]	<30>
Digital output	Bool (1)	Digital output 1 Bit	Binary Output 10 [1, 2] Binary Output Event 11 [1, 2] Binary Command 12 [1, 2, 3]	<45>
Digital input (event counter)	Integer without sign (32)	Counter input 32 Bit Unsigned	Counter 20 [**1**, 2] Frozen Counter 21 [1, 2, **5**, 6] Counter Event 22 [1, 2, **5**, 6] Frozen Counter Event 23 [1, 2, **5**, 6]	<37>
Digital input (usage meter)	Floating-point number with sign (32)	Counter input 32 Bit Float	Analog Input 30 [1, 2, **5**] Analog Input Event 32 [1, 2, 3, 4, 5, **7**]	<36>
Analog input (analog value) Temperature (internal), Power supply (external), Battery	Floating-point number with sign (32)	Analog input 32 Bit Float	Analog Input 30 [1, 2, **5**] Analog Input Event 32 [1, 2, 3, 4, 5, **7**]	<36>
Analog output (analog value)	Floating-point number with sign (32)	Analog output 32 Bit Float	Analog Output Status 40 [1, 2, 3] Analog Output 41 [1, 2, 3] Analog Output Event 42 [1, 2, 3, 4, 5, 7]	<50>
Analog input (counter)	Integer without sign (32)	Analog input 32 Bit Unsigned	Counter Static 20 [**1**, 2] Frozen Counter 21 [1, 2, **5**, 6] Counter Event 22 [1, 2, **5**, 6] Frozen Counter Event 23 [1, 2, **5**, 6]	<37>

***** The data points of the protocols "TeleControl Basic" and "IEC" can be used both in the read direction (in) and the write direction (out).

****** DNP3: The variations in bold print are the standard variations preferably used by the RTU.

4.18.6 Status IDs of the data points

Status IDs of data points

With the values of the data points, the RTU sends 1 byte with status IDs. The status IDs can be evaluated by the partner.

Below you will find tables with the status IDs of the three communications protocols.

The "meaning" (second row of the table) relates to the specified "bit status" (third row of the table).

Status IDs - TeleControl Basic

Table 4- 5 Byte assignment of the status byte for data points

Bit	7	6	5	4	3	2	1	0
Flag name	-	NON_ EXISTENT	SB Substituted	LOCAL_ FORCED	CY CARRY	OVER_ RANGE	RESTART	ONLINE
Meaning	-	Data point does not exist or S7 address unreacha-ble	Substitute value	Local oper-ator control	Counted value over-flow before reading the value	Analog value: Val-ue range exceeded	Value not updated after start	Value is invalid
Bit status	*not sup-ported (always 0)*	1	*not sup-ported (always 0)*	*not sup-ported (always 0)*	*not sup-ported (always 0)*	1	1	1

Status IDs - DNP3

The status IDs correspond to the following elements of the specification:

OBJECT FLAGS - DNP3 Specification, Volume 6, Data Object Library-Part 1

Table 4- 6 DNP3: Bit assignment of the status byte for DNP3 data points

Bit	7	6	5	4	3	2	1	0
Flag name	-	-	-	LOCAL_ FORCED	DISCONTI NUITY	OVER_ RANGE	RESTART	ONLINE
Meaning	-	-	-	Local oper-ator control	Counted value over-flow before reading the value	Value range ex-ceeded, analog value	Value not updated after start	Value is invalid
Bit status	*not sup-ported (always 0)*	*not sup-ported (always 0)*	*not sup-ported (always 0)*	*not sup-ported (always 0)*	*not sup-ported (always 0)*	1	1	1

Status IDs - IEC

The status IDs correspond to the following elements of the specification:

Quality descriptor - IEC 60870 Part 5-101

Table 4- 7 IEC: Bit assignment of the status byte for IEC data points

Bit	7	6	5	4	3	2	1	0
Flag name	-	-	SB substituted	-	CY carry	OV overflow	NT not topical	IV invalid
Meaning	-	-	Substitute value	-	Counted value-overflow before reading the value	Value - range exceeded, analog value	Value not updated	Value is invalid
Bit status	*not supported (always 0)*	*not supported (always 0)*	*not supported (always 0)*	*not supported (always 0)*	*not supported (always 0)*	1	1	0

4.18.7 Wake-up call / wake-up SMS

Waking the RTU from sleep mode

The RTU can be woken out of the sleep mode with a wake-up call from a mobile phone.

When using the communications protocol "TeleControl Basic", the RTU can also be woken by a wake-up SMS message that can be generated by TCSB.

Requirements

The most important requirements for the wake up are:

- **Authorization of the phone number**

  The phone number of the mobile phone that calls or sends a wake-up SMS to the RTU must be configured, see section User (Page 105).

  The authorized numbers are configured in the WBM of the RTU for the individual users in the group. "Users / groups".

- **Readiness of the RTU to receive**

  To receive a wake-up SMS message promptly, you need to configure the operating modes of the RTU so that the RTU regularly books into the mobile wireless network to check whether SMS messages have been sent, see section Operating modes (Page 110).

  Receiving a wake-up call in sleep mode is only possible if the parameter "Turn on mobile wireless interface regularly and check for receipt of wake-up SMS message? in the "Sleep mode" parameter group has the setting "Check permanently".

Wake up

When woken the RTU changes to the communication mode and handles all associated tasks, for example including sending messages.

The RTU establishes a connection to the communications partner.

- TeleControl Basic: Connection to the telecontrol server
- DNP3 / IEC: Connection to the VPN server that establishes the further connection to the master.

Texts for wake-up SMS messages

For wake-up SMS messages, you need to use the following text in the message:

```
TELESERVICE
```

Programming

5

5.1 Programming the blocks

Programming the program blocks for the control tasks

For the control tasks of the RTU, you will find prewritten program blocks that you can program under the entry "Program" in the WBM in up to 8 networks.

Networks

Every network is shown in a tab of the WBM. In the top line of the tab, you can assign a name to the network (max. 20 characters).

In the second line of the tab, you can enter a comment for this network (max. 20 characters).

When you open the WBM "Network 1" is already created.

Representation and programming the networks and blocks

The blocks are represented graphically.

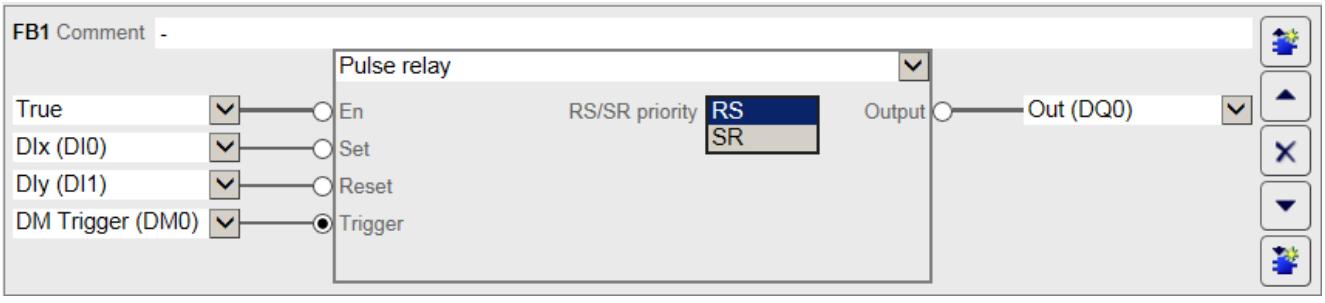

Figure 5-1 Representation of a program block, here with an inverted input parameter "Trigger"

After creating a program block, you can select the block type from the drop-down list of the block name (as shown: "Pulse relay").

At the top of the block, you can enter an optional comment for the block (max. 20 characters).

The input parameters on the left and the output parameters on the right are assigned using the drop-down lists from the previously configured tags of the RTU.

Function parameters in the middle of the block icon are programmed by entering with the keyboard or by selecting a value from a drop-down list. "RS/SR priority").

Buttons

	Creates a new network or deletes the select network.
	Creates a new program block above.
	Moves the selected program block up.
	Deletes the selected program block. If
	Moves the selected program block down.
	Creates a new program block below.
En	Inverted input/output with contact symbol filled with black (here parameter "En")

Inverting inputs and outputs

You can invert the values of digital (binary) inputs and outputs by clicking on the round symbol at the input or output. The symbol is filled with black, see table.

Example:

- A non-inverted digital input is processed with the input signal 1.
- An inverted digital input is processed with the input signal 0.

In the block shown (see above), the input parameter "Trigger" is inverted.

Entry of decimal numbers

In all input boxes of parameters in which fractional decimal numbers can be entered, the decimal places are separated by a period.

5.2 Often used parameters

Enabling parameter "En"

Every program block contains the input parameter "En".

The processing (call) of the blocks is enabled via the input parameter "En". The possible values of the parameter have the following meaning:

- True

  Default setting when creating a new block

  With this setting, the enable is permanently activated. The block is processed in the configured update cycle.

- False

  With this setting, the enable is permanently deactivated. The block is not processed.

- Digital input / digital output / digital memory bit

  The block is called by the cyclic program if a 1 is present at the configured input.

  If the input is inverted, the block is called when there is a 0 at the input.

- STATUS_ERROR

  The block is only called by the cyclic program if a diagnostics message of the class "ERROR" or "FATAL" is generated.

Input parameter "Trigger"

Input parameters of the type "Trigger" start the relevant program block with the edge change 0 → 1. The input must be reset to 0 by the by the user program. In the inverted form, a trigger starts block processing with the edge change 1 → 0.

The possible values of the parameter have the following meaning:

- True

  With this setting, the trigger starts block processing only in the first cycle. The block is processed only once.

- False

  With this setting, the block is not processed.

- STATUS_ERROR

  The block is only called on an edge change, this means if a diagnostics message of the class "ERROR" or "FATAL" is generated.

Input parameter "Reset"

The input parameter resets a digital input and and resets the output of the block to zero or the start value.

The possible values of the parameter have the following meaning:

- True

  With this setting the other inputs are ignored. The block is not processed.

- False

  The block is processed in every cycle.

- STATUS_ERROR

  The block is only called on an edge change, this means if a diagnostics message of the class "ERROR" or "FATAL" is generated.

Output parameter "Error"

The output parameter "Error" is set in the following situations:

- In an analog value block, the value is outside the range of values.

  This occurs when the value calculated by the block is outside the permitted range of values of the tag type of the output.

- A message generated by a block cannot be saved because the maximum number of messages to be saved has been reached (transfer buffer full).

When the output parameter "Error" is set, other output parameters are not updated but retain the last values before the error occurred.

Recurring settings of parameters

With most program blocks there are default settings of the input and output parameters that are explained here.

Settings of input parameters

Many blocks have recurring parameters which will be described in advance here. The settings described below mainly involve parameters for digital tags (except "En").

- *- empty (no entry) -*

  Default for required inputs of a block

  If the input is not configured, no value is output during block processing.

- Unused

  Default for optional parameters of a newly created block

  Inputs with the setting "Unused" are not evaluated.

  If the block only has a single input, this setting means that the block is not processed.

- True

  With this setting, the value 1 is always used for block processing.

- False

  With this setting, the value 0 is always used for block processing.

- STATUS_ERROR

  The input is only evaluated in block processing when a diagnostics message of the class "ERROR" or "FATAL" is generated.

  When the cause of the error has been eliminated, the value of the input is reset to zero.

Settings of output parameters

- *- empty (no entry) -*

  Default for required outputs of a block

  If the output is not configured, no value is output during block processing.

- Unused

  Default for optional or alternative outputs of a block

  If the output is not configured, no value is calculated for this output during block processing.

5.3 Blocks for logical functions

5.3.1 Logical AND

Logical AND

Function

At least two inputs must be activated so that the block is processed.

The output of the block is set to 1, when all configured inputs are set to 1 at the same time.

If one or more activated inputs is set to 0, the output is set to 0.

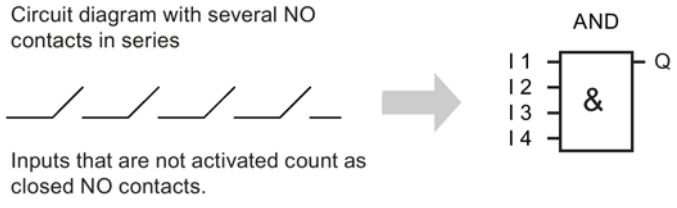

Parameters

Parameters	Range of values	Description
Input parameters		
En		Enable parameter, see section Often used parameters (Page 158).
Input 1 ... Input 4	• Digital input / output / bit memory • True / False • STATUS_ERROR	The values of the inputs are processed by the block function.
Output parameters		
Output	• Digital output / bit memory	Tag in which the value calculated by the block is output.

5.3.2 Logical OR

Logical OR

Function

At least one input must be activated so that the block is processed.

The output of the block is set to 1, when at least one configured input is set to 1.

If no input is set to 1, the output is set to 0.

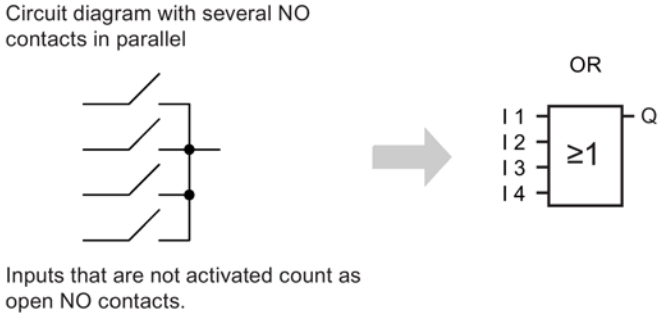

Parameters

Parameters	Range of values	Description
Input parameters		
En		Enable parameter, see section Often used parameters (Page 158).

Parameters	Range of values	Description
Input 1 ... Input 4	• Digital input / output / bit memory • True / False • STATUS_ERROR	The values of the inputs are processed by the block function.
Output parameters		
Output	• Digital output / bit memory	Tag in which the value calculated by the block is output.

5.3.3 Exclusive OR (XOR)

Exclusive OR (XOR)

Function

The output of the block is set to 1 when the two inputs have different values; in other words, when precisely one of the two inputs is set to 1.

If both inputs have the same value (0 or 1), the output is set to 0.

Parameters

Parameters	Range of values	Description
Input parameters		
En		Enable parameter, see section Often used parameters (Page 158).
Input 1 ... Input 2	• Digital input / output / bit memory • True / False • STATUS_ERROR	The values of the inputs are processed by the block function.
Output parameters		
Output	• Digital output / bit memory	Tag in which the value calculated by the block is output.

5.3.4 Logical NOT

Logical NOT

Function

Inverter: The block inverts the input signal.

If the input is set to 0, the output of the block is set to 1.

If the input is set to 1, the output of the block is set to 0.

Parameters

Parameters	Range of values	Description
Input parameters		
En		Enable parameter, see section Often used parameters (Page 158).
Input	• Digital input / output / bit memory • True / False • STATUS_ERROR	The value of the input is processed by the block function.
Output parameters		
Output	• Digital output / bit memory	Tag in which the value calculated by the block (the inverted value of the input) is output.

5.4 Blocks for time functions

Note

Higher energy consumption due to additional update cycles

Time functions can generate additional update cycles to update the outputs of the function. Additional update cycles can significantly increase power consumption.

5.4.1 On delay

On delay

Function

When there is an edge change 0 → 1 at the "Trigger" input, the configurable time of the On delay is started. After the On delay has elapsed, the output is set to 1.

If "Trigger" changes back to 0 before the On delay has elapsed, the On delay is stopped and the output remains set to 0.

If "Trigger" is reset to 0 before the On delay (Q = 1) has elapsed, the output (Q) is reset to 0.

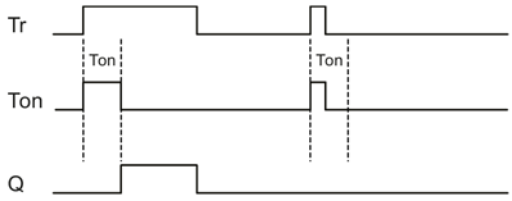

Tr Trigger
Ton On delay
Q Output

Figure 5-2 Circuit diagram of a block. "On delay"

Parameters

Parameters	Range of values	Description
Input parameters		
En		Enable parameter, see section Often used parameters (Page 158).
Trigger	• True / False • Digital input / output / bit memory • STATUS_ERROR	When there is an edge change 0 → 1 the On delay is started. When there is an edge change 1 → 0 the output is reset to 0. With the setting "True" the trigger is always active. With the setting "False" the block is never processed.
Function parameters		
On delay (ms)	100 .. 999999999	Delay in milliseconds
Output parameters		
Output	• Digital output / bit memory	Tag in which the value calculated by the block is output.

5.4.2 Off delay

Off delay

Function

When there is an edge change 0 → 1 at the "Trigger" input, the output is set to 1 and the configurable time of the Off delay is started. While the delay time is running the output remains set to 1. The output is only set to 0 again after the delay time has elapsed.

When there is an edge change 0 → 1 at the input "Reset" the Off delay and the output are reset to 0.

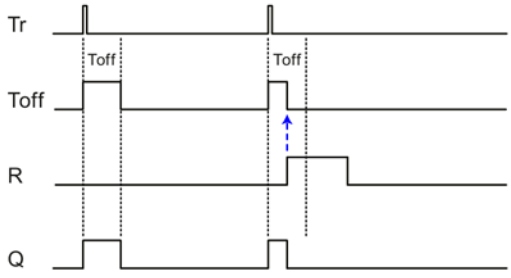

Tr Trigger
Toff Off delay
R Reset
Q Output

Figure 5-3 Circuit diagram of a block. "Off delay"

Parameters

Parameters	Range of values	Description
Input parameters		
En		Enable parameter, see section Often used parameters (Page 158).
Trigger	• True / False • Digital input / output / bit memory • STATUS_ERROR	When there is an edge change 0 → 1 the Off delay is started. After the Off delay has elapsed, the output is set to 0. With the setting "True" the trigger is always active. With the setting "False" the block is never processed.
Reset	• True / False • Digital input / output / bit memory • STATUS_ERROR	When there is an edge change 0 → 1 Off delay is stopped and the output is set to 0. As long as "Reset" is set to 1, the value of "Trigger" is ignored. When there is an edge change 1 → 0 the block can be processed again. With the setting "True" the input is always active and the block is actually turned off . With the setting "False" the Off delay is never reset.

Parameters	Range of values	Description
Function parameters		
Off delay (ms)	100 .. 999999999	Delay in milliseconds
Output parameters		
Output	• Digital output / bit memory	Tag in which the value calculated by the block is output.

5.4.3 On / Off delay

On / Off delay

Function

When there is an edge change 0 → 1 at the "Trigger" input, the configurable time of the On delay is started. After the On delay has elapsed, the output is set to 1. If "Trigger" changes back to 0 before the On delay has elapsed, the delay time is stopped and the output remains set to 0.

When there is an edge change 1 → 0 at the "Trigger" input, the configurable time of the Off delay is started. After the Off delay has elapsed, the output is set to 0. If "Trigger" changes back to 1 before the Off delay has elapsed, the output is set to 0. At the same time the running of the On delay is restarted and the Off delay is stopped.

When there is an edge change 0 → 1 at the input "Reset" the On / Off delay is suppressed and the output remains set to 0.

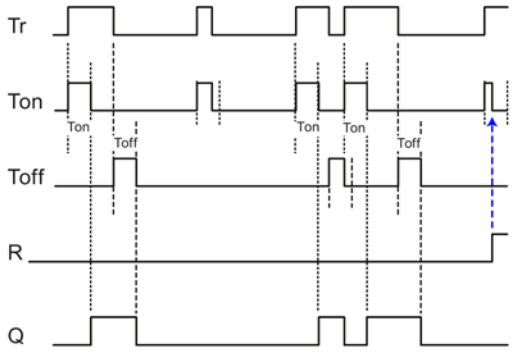

Tr Trigger
Ton On delay
Toff Off delay
R Reset
Q Output

Figure 5-4 Circuit diagram of a block. "On / Off delay"

Parameters

Parameters	Range of values	Description
Input parameters		
En		Enable parameter, see section Often used parameters (Page 158).
Trigger	• True / False • Digital input / output / bit memory • STATUS_ERROR	When there is an edge change 0 → 1 the On delay is started. When there is an edge change 1 → 0 the Off delay is started. With the setting "True" the trigger is always active. With the setting "False" the block is never processed.
Reset	• True / False • Digital input / output / bit memory • STATUS_ERROR	When there is an edge change 0 → 1 the On / Off delay is stopped and the output is set to 0. As long as the input is set to 0, the value of "Trigger" is ignored. When there is an edge change 1 → 0 the block can be processed again. With the setting "True" an edge change 0 → 1 at "Trigger" is permanently ignored. The "Off delay " function is therefore also turned off. With the setting "False" the input is never active.
Function parameters		
On delay (ms)	100 .. 999999999	On delay in milliseconds After the On delay has elapsed, the output is set to 1.
Off delay (ms)	100 .. 999999999	Off delay in milliseconds After the Off delay has elapsed, the output is set to 0.
Output parameters		
Output	• Digital output / bit memory	Tag in which the value calculated by the block is output.

5.4.4 Retentive on delay

Retentive on delay

Function

When there is an edge change 0 → 1 at the "Trigger" input, the configurable time of the On delay is started. After the delay time has elapsed, the output is set to 1.

With this program block, if "Trigger" changes back to 0 before the delay time has elapsed, the On delay is not stopped.

When there is an edge change 0 → 1 at the "Reset" input during the On delay, the On delay is stopped and the output remains set to 0.

When there is an edge change 0 → 1 at the "Reset" input after the On delay has elapsed the output is reset to 0.

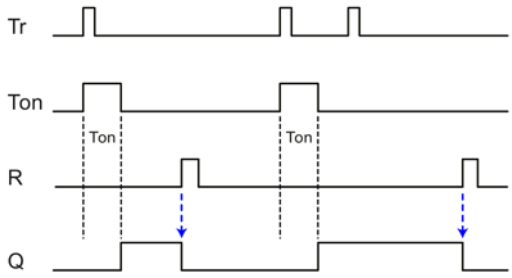

Tr Trigger
Ton On delay
R Reset
Q Output

Figure 5-5 Circuit diagram of a block. "Retentive on delay"

Parameters

Parameters	Range of values	Description
Input parameters		
En		Enable parameter, see section Often used parameters (Page 158).
Trigger	• True / False • Digital input / output / bit memory • STATUS_ERROR	When there is an edge change 0 → 1 the time of On delay is started. With the setting "True" the trigger is always active. With the setting "False" the block is never processed.
Reset	• True / False • Digital input / output / bit memory • STATUS_ERROR	When there is an edge change 0 → 1 at the "Reset" input after the On delay (= 1) has elapsed the output is reset to 0. With the setting "True" the input is always active and the output is set to 0 immediately. The function is therefore actually turned off. With the setting "False" the input is never active.
Function parameters		
On delay (ms)	100 .. 999999999	On delay in milliseconds After the time of the On delay has elapsed, the output is set to 1.
Output parameters		
Output	• Digital output / bit memory	Tag in which the value calculated by the block is output.

5.4.5 Pulse generator

Pulse generator

Function

A regularly clocked pulse is output at the output. The cycle length is specified for the duration of the 0 and 1 signal using the function parameters.

Parameters

Parameters	Range of values	Description
Input parameters		
En		Enable parameter, see section Often used parameters (Page 158).
Function parameters		
Pulse duration (ms)	500 .. 999999999	Time (milliseconds) in the clock cycle during which the output = 1.
Interpulse period duration (ms)	500 .. 999999999	Time (milliseconds) in the clock cycle during which the output = 0.
Output parameters		
Output	• Digital output / bit memory	Tag in which the pulses generated by the block are output.

5.4.6 Random on/off delay

Random on/off delay

Function

When there is an edge change 0 → 1 at the "Trigger" input, the random time of the On delay is started (within the configured limits). After the On delay has elapsed, the output is set to 1. If "Trigger" changes back to 0 before the On delay has elapsed, the delay time is stopped and the output remains set to 0.

When there is an edge change 1 → 0 at the "Trigger" input, the random time of the Off delay is started (within the configured limits). After the Off delay has elapsed, the output is set to 0. If "Trigger" changes back to 1 before the Off delay has elapsed, the output is set to 0. At the same time the running of the On delay is restarted and the Off delay is stopped.

When there is an edge change 0 → 1 at the input "Reset" the On delay is suppressed and the output remains set to 0.

For the diagram, refer to On / Off delay.

Parameters

Parameters	Range of values	Description
Input parameters		
En		Enable parameter, see section Often used parameters (Page 158).
Trigger	• True / False • Digital input / output / bit memory • STATUS_ERROR	When there is an edge change 0 → 1 the On delay is started. When there is an edge change 1 → 0 the Off delay is started. With the setting "True" the trigger is always active. With the setting "False" the block is never processed.
Reset	• True / False • Digital input / output / bit memory • STATUS_ERROR	When there is an edge change 0 → 1 On delay is stopped and the output is set to 0. As long as the input is set to 0, the value of "Trigger" is ignored. When there is an edge change 1 → 0 the block can be processed again. With the setting "True" an edge change 0 → 1 at "Trigger" is permanently ignored. The "Off delay " function is therefore also turned off. With the setting "False" the input is never active.
Function parameters		
On delay (ms)	100 .. 999999999	Minimum time in the clock cycle during which the output = 1.
On delay max. (ms)	100 .. 999999999	Maximum time in the clock cycle during which the output = 1.
Off delay min (ms)	100 .. 999999999	Minimum time in the clock cycle during which the output = 0.
Off delay max. (ms)	100 .. 999999999	Maximum time in the clock cycle during which the output = 0.
Output parameters		
Output	• Digital output / bit memory	Tag in which the pulses generated by the block are output.

5.4.7 Year timer

Year timer

Requirement

Requirement for a precise calculation is the time-of-day synchronization of the RTU.

Function

Year timer

For the year timer a time per calendar year and/or per month can be specified in the function parameters during which the output is set to 1.

The turn on and off times are entered in the format "yyyy-mm-dd hh:mm:ss". Dates can be entered in the range from January 2000 to December 2099.

By selecting the "Yearly" and "Monthly" check boxes, you specify whether the programmed times are evaluated yearly or monthly.

If you select the "Pulse" option, at the turn on time only a single pulse with the length of an update cycle is set at the output instead of being permanently ON.

Switching variants from the function parameters "Yearly", "Monthly" and "Pulse"

The options for activating the function parameters result in the following switching variants. Four typical switching variants are explained below based on examples.

- Example 1
  - Date/time ON: 2015-06-15 12:00:00
  - Date/time OFF: 2017-08-31 12:00:00
  - "Yearly" disabled
  - "Monthly" disabled
  - "Pulse" disabled

  Since the options "Yearly" and "Monthly" are both disabled, the settings produce a single time during which the output is set to 1 . The time begins on June 15 2015 and ends on August 31 2017.

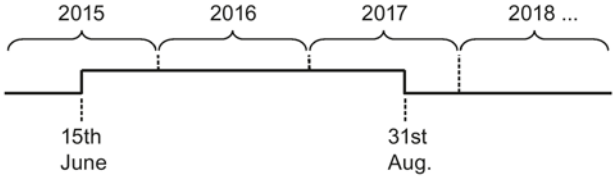

- Example 2
  - Date/time ON: 2015-03-15 12:00:00
  - Date/time OFF: 2018-08-31 12:00:00
  - "Yearly" disabled
  - "Monthly" disabled
  - "Pulse" enabled

  Since the options "Yearly" and "Monthly" are both disabled, the settings produce a single pulse on March 15, 2015..

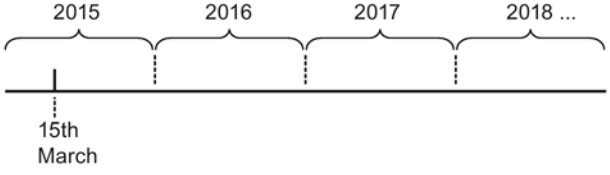

- Example 3
  - Date/time ON: 2015-05-15 12:00:00
  - Date/time OFF: 2099-08-31 12:00:00
  - "Yearly" enabled
  - "Monthly" disabled
  - "Pulse" disabled

  The settings result in yearly time periods during which the output is set to 1.

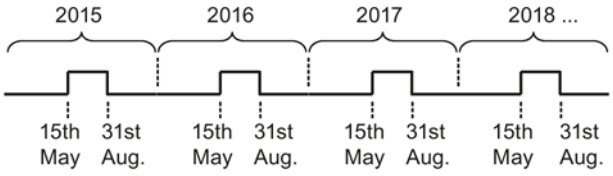

- Example 4
  - Date/time ON: 2015-08-15 00:00:00
  - Date/time OFF: 2099-12-15 00:00:00
  - "Yearly" enabled
  - "Monthly" enabled
  - "Pulse" enabled

  The settings result in continuous monthly pulses on the 15th of the month at the time 00:00.

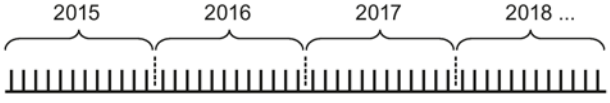

Parameters

Parameters	Range of values	Description
Input parameters		
En		Enable parameter, see section Often used parameters (Page 158).
Function parameters		
Date/time ON	[yyyy-mm-dd hh:mm:ss]	Turn on time
Date/time OFF	[yyyy-mm-dd hh:mm:ss]	Turn off time
Pulse	ON / OFF	The enabled option only sets pulses at the output instead of permanently ON.
Yearly	ON / OFF	Repeats the switching points annually.
Monthly	ON / OFF	Repeats the switching points monthly.
Output parameters		
Output	• Digital output / bit memory	Tag in which the value calculated by the block is output.

5.4.8 Week timer

Week timer

Requirement

Requirement for a precise calculation is the time-of-day synchronization of the RTU.

Function

For the week time, three times (cams) can be specified per week using the function parameters during which the output is set to 1.

If you select the "Pulse" option, at the turn on time only a single pulse with the length of an update cycle is set at the output instead of being permanently ON. When the "Pulse" option is selected, the behavior applies to all three cams.

The switching status of the week timer depends on the status of all three cams.

The three cams can overlap in time. If on and off times overlap, this will cause a conflict. In this case, the earliest on and off times have priority. Example:

Table 5- 1 Example of overlapping cams

Cam	On time	Off time
1	1:00 h	2:00 h
2	1:10 h	1:50 h
3	1:20 h	1:40 h

In this example the working time is 1:00 h to 1:40 h.

Parameters

Parameters	Range of values	Description
Input parameters		
En		Enable parameter, see section Often used parameters (Page 158).
Function parameters		
M T W T F S S	ON / OFF	Check box for specifying the weekdays (three periods of time) Select the active weekdays by clicking on the day check box.
ON1 .. ON3 OFF1 .. OFF3	[hh:mm]	Input boxes for three turn on times Input boxes for three turn off times
Pulse	ON / OFF	The enabled option only sets pulses at the output instead of permanently ON.
Output parameters		
Output	• Digital output / bit memory	Tag in which the value calculated by the block is output.

5.4.9 Astronomical clock

Astronomical clock

Requirement

Requirement for a precise calculation is the time-of-day synchronization of the RTU.

Function

With this function, the output is set to 1, when the system time of the RTU is between the time of sunrise and sunset.

The RTU calculates these times based on its current system time (including daylight saving/standard time) and its geographical position.

If you select "System location" for "Position", the RTU uses the geographical position configured on the "System" page in the WBM. With the setting "Manual" you can set position values for the block.

Parameters

Parameters	Range of values	Description
Input parameters		
En		Enable parameter, see section Often used parameters (Page 158).
Function parameters		
Position	• System location • Manual	Option for setting the geographic coordinates: • Manual: Specification by entering the coordinates in the input fields for "Latitude" nd "Longitude". • System location: Use of the coordinates configured for the RTU.
Latitude	-90 .. 0 .. +90	Latitude Enter the value for the latitude if you have selected the setting "Manual" for the "Position". Entry only as a number: Degrees with 4 decimal places North = positive, south = negative
Longitude	-180 .. 0 .. +180	Longitude Enter the value for the longitude if you have selected the setting "Manual" for the "Position". Entry only as a number: Degrees with 4 decimal places East = positive, west = negative
Output parameters		
Output	• Digital output / bit memory	Tag in which the value calculated by the block is output. Switching: • At sunrise: 1 • At sunset: 0

5.5 Blocks for analog value functions

5.5.1 Triggered saving

Triggered saving

Function

The block saves the current value of an analog input when a programmable event (Trigger) occurs. With an edge change 0 → 1 of "Trigger" the value of the input is written to the output.

The "Reset" input resets the output to 0. As long as "Reset" is set to 1, the "Trigger" input is ignored.

Parameters

Parameters	Tag type / range of values	Description
Input parameters		
En		Enable parameter, see section Often used parameters (Page 158).
Trigger	True / False Digital input / output / bit memory STATUS_ERROR	With an edge change 0 → 1 block processing is started and the value of "Input" is saved in the "Output". With the setting "True" an edge change 0 → 1 of the trigger is evaluated in the first update cycle. The block is processed only once. With the setting "False" the block is never processed.
Reset	True / False Digital input / output / bit memory STATUS_ERROR	When there is an edge change 0 → 1 the output is reset to 0. With the setting "TRUE" the function is actually turned off. With the setting "False" the output is never reset.
Input	Analog input / bit memory Event counter / usage meter	The current value of the input parameter is processed by the block as described above.

Parameters	Tag type / range of values	Description
Output parameters		
Output	Analog memory bit • Configured as a floating-point number: ±3.402823 e-38 .. ±3.402823 e+38 • Configured as a counter: 0 .. 4294967295	Tag in which the value calculated by the block is output.
Error	Digital output / bit memory	Error display: • 0: Block processing completed without errors • 1: Block processing aborted with an error For the meaning, see Often used parameters (Page 158).

5.5.2 Threshold value switch

Threshold value switch

Function

An analog input is monitored for two threshold values and a digital output signal is set as follows:

- If Threshold ON ≥ Threshold OFF:

  Output = 1, if input > Threshold ON

  Output = 0, if input ≤ Threshold OFF
- If Threhold ON < Threshold OFF:

  Output = 1, if Threshold ON ≤ input < Threshold OFF

Parameters

Parameters	Tag type / range of values	Description
Input parameters		
En		Enable parameter, see section Often used parameters (Page 158).
Input	Analog input / bit memory Event counter / usage meter	The value of the input is monitored for the two threshold values (function parameters) by the block.

Parameters	Tag type / range of values	Description
Function parameters		
Threshold ON	3.402823 e-38 .. 3.402823 e+38 Max. 19 characters, display of max. 4 decimal places.	Turn on threshold value (absolute value) When the input value exceeds the value of "Threshold ON", the output is set to 1.
Threshold OFF	3.402823 e-38 .. 3.402823 e+38 Max. 19 characters, display of max. 4 decimal places.	Turn off threshold value (absolute value) When the input value falls below the value of "Threshold OFF", the output is set to 0.
Output parameters		
Output	Digital output / bit memory	Tag in which the value calculated by the block is output:
Error	Digital output / bit memory	Error display: • 0: Block processing completed without errors • 1: Block processing aborted with an error For the meaning, see Often used parameters (Page 158).

By setting different values (Threshold ON > Threshold OFF) a hysteresis can be programmed between the two threshold values.

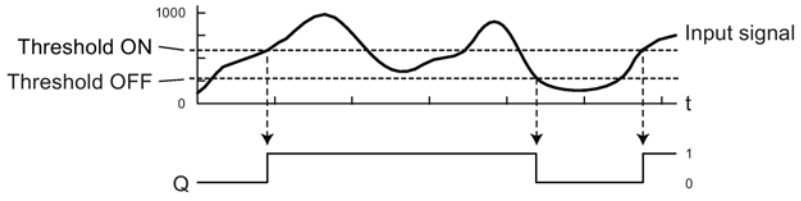

Figure 5-6 Example of setting "Threshold ON" > "Threshold OFF"

Programming "Threshold ON" < "Threshold OFF"

If on the other hand you set the value of "Threshold ON" lower than that of "Threshold OFF", the behavior of the output changes significantly. This is illustrated by the following example in which the two threshold values have been swapped over compared with the example above:

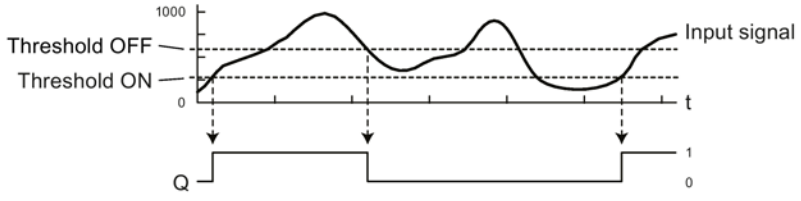

Figure 5-7 Example of setting "Threshold ON" > "Threshold OFF"

5.5.3 Analog value comparator

Analog value comparator

Function

The values of two analog inputs are compared by forming the difference. If the difference of two programmable threshold values is overshot or undershot, a digital output signal is set.

The difference of "Input 1" minus "Input 2" is monitored for the two threshold values "Threshold ON" and "Threshold OFF":

By setting different values for the function parameter (Threshold ON > Threshold OFF) a hysteresis can be programmed.

In the table note the different behavior when "Threshold ON" is lower or higher than "Threshold OFF".

Parameters

Parameters	Tag type / range of values	Description
Input parameters		
En		Enable parameter, see section Often used parameters (Page 158).
Input 1	Analog input / bit memory Event counter / usage meter	The value of the input is processed as a minuend by the block function.
Input 2	Analog input / bit memory Event counter / usage meter	The value of the input is processed as a subtrahend by the block function.
Function parameters		
Threshold ON	3.402823 e-38 .. 3.402823 e+38 Max. 19 characters, display of max. 4 decimal places	Turn on threshold value (absolute value) • Threshold ON ≥ Threshold OFF: If the difference of "Input 1" minus "Input 2" overshoots the value "Threshold ON" the output is set to 1. • Threshold ON < Threshold OFF: When "Threshold ON" ≤ ("Input 1" minus "Input 2") < "Threshold OFF", the output is set to 1.
Threshold OFF	3.402823 e-38 .. 3.402823 e+38 Max. 19 characters, display of max. 4 decimal places	Turn off threshold value (absolute value) • Threshold ON ≥ Threshold OFF: If the difference of "Input 1" minus "Input 2" undershoots the value "Threshold OFF" the output is set to 0.

Parameters	Tag type / range of values	Description
Output parameters		
Output	Digital output / bit memory	Tag in which the value calculated by the block is output.

5.5.4 Analog value monitoring

Analog value monitoring

Function

The analog value of the input is monitored for positive and negative change when the "Trigger" input is activated.

The values for a positive change (Δ+) and a negative change (Δ-) can be programmed.

When the "Trigger" input is set, the current value of the input (A_{Trg}) is saved and the block processing started. As soon as the value of the analog input has reached the value of the negative change (A_{Trg} + Δ-) or the value of the positive change (A_{Trg} + Δ+) the output is set to 1.

As soon as the value of the analog input is once again between the values A_{Trg} + Δ- and A_{Trg} + Δ+ the output is set to 0 again.

Parameters

Parameters	Tag type / range of values	Description
Input parameters		
En		Enable parameter, see section Often used parameters (Page 158).
Trigger	True / False Digital input / output / bit memory STATUS_ERROR	With an edge change 0 → 1 block processing is started (if En = 1) and the current value of the analog input (A_{Trg}) is saved. With the setting "True" the trigger is always active. With the setting "False" the block is never processed.
Input	Analog input / bit memory Event counter / usage meter	The value (A_{Trg}) of the input at the time of the edge change of "Trigger" is monitored by the block function for positive and negative change.

Parameters	Tag type / range of values	Description
Function parameters		
Positive change	3.402823 e-38 .. 3.402823 e+38 Max. 19 characters, display of max. 4 decimal places	Absolute value of the positive change (Δ+)
Negative change	3.402823 e-38 .. 3.402823 e+38 Max. 19 characters, display of max. 4 decimal places	Absolute value of the negative change (Δ-)
Output parameters		
Output	Digital output / bit memory	Tag in which the value calculated by the block is output: • 1 = "Positive change" overshot or "Negative change " undershot • 0 = "Positive change" not overshot and "Negative change " not undershot

5.5.5 Min. /Max. /Mean value

Min. /Max. /Mean value

Function

With the values from a minimum of one and a maximum of four analog inputs, the block can perform the functions minimum, maximum and mean value generation. The result of the calculation is written to the relevant output.

To activate the individual functions, the output in question must be programmed.

- Minimum

  From the activated analog inputs, the minimum value is determined in each update cycle and written to the output.

- Maximum

  From the activated analog inputs, the maximum value is determined in each update cycle and written to the output.

- Mean value

  From the activated analog inputs, the mean value is generated in each update cycle and written to the output.

Parameters

Parameters	Tag type / range of values	Description
Input parameters		
En		Enable parameter, see section Often used parameters (Page 158).
Input 1 .. Input 4	Analog input / bit memory Event counter / usage meter	The values of the configured inputs are processed by the three types of calculation. Inputs with the setting "Input unused" are not evaluated.
Output parameters		
Minimum	Analog memory bit • Configured as a floating-point number: 3.402823 e-38 .. 3.402823 e+38 • Configured as a counter: 0 .. 4294967295	Tag in which the obtained minimum value is output.
Maximum	Analog memory bit • Configured as a floating-point number: 3.402823 e-38 .. 3.402823 e+38 • Configured as a counter: 0 .. 4294967295	Tag in which the obtained maximum value is output.
Mean value	Analog memory bit • Configured as a floating-point number: 3.402823 e-38 .. 3.402823 e+38 • Configured as a counter: 0 .. 4294967295	Tag in which the calculated mean value is output.
Error	Digital output / bit memory	Error display: • 0: Block processing completed without errors • 1: Block processing aborted with an error For the meaning, see Often used parameters (Page 158).

5.5.6 Addition

Addition

Function

The block adds the values of up to four analog inputs. The sum is written to the output.

Parameters

Parameters	Tag type / range of values	Description
Input parameters		
En		Enable parameter, see section Often used parameters (Page 158).
Input 1 .. Input 4	Analog input / bit memory Event counter / usage meter	The values of the activated inputs are used for the addition. Inputs with the setting "Input unused" are not evaluated.
Output parameters		
Sum	Analog memory bit • Configured as a floating-point number: 3.402823 e-38 .. 3.402823 e+38 • Configured as a counter: 0 .. 4294967295	Tag in which the calculated sum is output.
Error	Digital output / bit memory	Error display: • 0: Block processing completed without errors • 1: Block processing aborted with an error For the meaning, see Often used parameters (Page 158).

5.5.7 Subtraction

Subtraction

Function

The block subtracts the values of one to three inputs (Input 2 + Input 3 + Input 4) from the value of the input "Input 1". The difference is written to the output.

Parameters

Parameters	Tag type / range of values	Description
Input parameters		
En		Enable parameter, see section Often used parameters (Page 158).
Input 1	Analog input / bit memory Event counter / usage meter	Minuend. The values of the inputs 2 ..4 are subtracted from this input.
Input 2 .. Input 4	Analog input / bit memory Event counter / usage meter	Subtrahends The sum of the values of the activated inputs 2 to 4 is subtracted from the value of Input 1. Inputs with the setting "Input unused" are not evaluated.
Output parameters		
Difference	Analog memory bit • Configured as a floating-point number: 3.402823 e-38 .. 3.402823 e+38 • Configured as a counter: 0 .. 4294967295	Tag in which the calculated difference is output.
Error	Digital output / bit memory	Error display: • 0: Block processing completed without errors • 1: Block processing aborted with an error For the meaning, see Often used parameters (Page 158).

5.5.8 Multiplication

Multiplication

Function

The block multiplies the values of up to four analog inputs. The product is written to the output.

Parameters

Parameters	Tag type / range of values	Description
Input parameters		
En		Enable parameter, see section Often used parameters (Page 158).
Input 1 .. Input 4	Analog input / bit memory Event counter / usage meter	The values of the activated inputs are used for the multiplication. Inputs with the setting "Input unused" are not evaluated.
Output parameters		
Product	Analog memory bit • Configured as a floating-point number: 3.402823 e-38 .. 3.402823 e+38 • Configured as a counter: 0 .. 4294967295	Tag in which the calculated product is output.
Error	Digital output / bit memory	Error display: • 0: Block processing completed without errors • 1: Block processing aborted with an error For the meaning, see Often used parameters (Page 158).

5.5.9 Division

Division

Function

The block divides the value of the input "Dividend" by the value of the input "Divisor". The quotient is written to the output.

Parameters

Parameters	Tag type / range of values	Description
Input parameters		
En		Enable parameter, see section Often used parameters (Page 158).
Dividend	Analog input / bit memory Event counter / usage meter	The value of the input is is used as a dividend.

Parameters	Tag type / range of values	Description
Divisor	Analog input / bit memory Event counter / usage meter	The value of the input is is used as a divisor. The value 0 is not permitted.
Output parameters		
Quotient	Analog memory bit • Configured as a floating-point number: 3.402823 e-38 .. 3.402823 e+38 • Configured as a counter: 0 .. 4294967295	Tag in which the calculated quotient is output.
Error	Digital output / bit memory	Error display: • 0: Block processing completed without errors • 1: Block processing aborted with an error For the meaning, see Often used parameters (Page 158).

5.6 Counter blocks

5.6.1 Counters

Counters

Function

The block counts the positive edges at the input parameter "Input".

Only via the input parameter "Reset", is the counter reset to 0 or the Initial value.

If the output should not start at the value 0, you can specify a different start value using the function parameter "Initial value".

With the "Direction" function parameter you specify the count direction:

- Incremental (forwards)
- Decremental (backwards)

The current total counted value is output at the "Counted value" output as an unsigned 32-bit value.

Using the function parameter "Turn on threshold", the value for the counted value can be configured and when it is overshot or undershot, the output "Threshold status" is set.

Parameters

Parameters	Tag type / range of values	Description
Input parameters		
En		Enable parameter, see section Often used parameters (Page 158).
Input	Digital input / output / bit memory STATUS_ERROR	Counter input The block counts the positive edges (0 → 1) at the input and outputs the total (including the Initial value) at the output. **Inverted parameter:** The block counts the negative edges (1 → 0) at the input and outputs the total (including the Initial value) at the output.
Reset	True / False Digital input / output / bit memory STATUS_ERROR	Resets the counter to 0 or the Initial value on a positive edge (0 → 1). With the setting "True" the counter is continuously reset and the output remains permanently set to 0 or the initial value. With the setting "Input unused" or "False", the count is not reset.
Function parameters		
Initial value	0 .. 4294967295	Start value
Turn on threshold	0 .. 4294967295	Threshold value for the counted value. Switches the "Threshold status" output depending on the count direction. • Incremental counting: If "Turn on threshold" is reached and exceeded, the "Threshold status" output is set to 1. • Decremental counting: If "Turn on threshold" is reached and undershot, the "Threshold status" output is set to 1.
Direction	• Decremental • Incremental	• Count down • Count up
Output parameters		
Counted value	Analog memory bit 0 .. 4294967295	Tag in which the totaled counted value is output. If there is overflow (4294967295) the counter starts again at zero.
Threshold status	Digital output / bit memory	Tag that is set to 1 if the value of "Turn on threshold" is overshot or undershot. The output is reset to 0 if the following events occur: • Incremental counting: Reset if "Turn on threshold" is undershot or if the "Reset" input = 1 or if the counter overflows (value = 0) • Decremental counting: Reset if "Turn on threshold" is overshot

5.6.2 Elapsed time counter

Elapsed time counter

Function

The block counts the operating time after the positive edge change at the "Trigger" input parameter.

Only via the input parameter "Reset", is the counter reset to 0 or the Initial value.

If the output should not start at the value 0, you can specify a different start value using the function parameter "Initial value".

The current total counted value is output at the output as an unsigned 32-bit value in every update cycle.

Parameters

Parameters	Tag type / range of values	Description
Input parameters		
En		Enable parameter, see section Often used parameters (Page 158).
Trigger	Digital input / output / bit memory STATUS_ERROR	Counter input After the first edge change 0 → 1 and continuous value 1 of "Trigger" the block begins to count the operating time.
Reset	True / False Digital input / output / bit memory STATUS_ERROR	Resets the counter to 0 or the Initial value on a positive edge (0 → 1). With the setting "True" the counter is continuously reset and the output remains permanently set to 0. With the setting "Input unused" or "False", the count is not reset. If there is overflow (4294967295) the counter starts again at zero or at the initial value.
Function parameters		
Initial value (100 ms)	0 .. +4294967295	Start value Unit: [100 ms]
Output parameters		
Operating time (100 ms)	Analog memory bit 0 .. +4294967295	Tag in which the totaled value of the operating time is output. If there is overflow (4294967295) the counter starts again at zero. Unit: [100 ms]

5.6.3 Frequency counter

Frequency counter

Function

The block counts the positive edges at the input parameter "Counter signal" and converts the number of pulses per time unit to a frequency (frequency converter).

After running through a complete counting interval, the calculated frequency is output at the "Frequency" output and the "Value valid" output is set to 1.

Via the "Reset" input parameter, the counter and the validity are reset to 0.

Count interval and validity

The block counts the edge changes over the period of the configured update cycles that are configured for the input of the block (count interval).

The length of the count interval is the product of the update cycle and the reduction factor for the update cycle.

If the count interval has not yet been run through, the output "Value valid is set to 0.

If the count interval has been run through competely, the output "Value valid is set to 1.

Example:
The basic cycle is configured at 10 seconds, the reduction factor is configured at 4. The count interval for this input therefore takes 40 seconds. After the first, second and third update cycle (after 10, 20, 30 seconds) the "Value valid" output is set to 0. Only after the 4th count interval (after 40 seconds) is the "Value valid" output set to 1 and the "Frequency" output can be further processed.

Parameters

Parameters	Tag type / range of values	Description
Input parameters		
En		Enable parameter, see section Often used parameters (Page 158).
Reset	True / False Digital input / output / bit memory STATUS_ERROR	On a positive edge (0 → 1) resets the counter and the "Value validgültig" output to 0. With the setting "True" the counter is continuously reset and the outputs remain permanently set to 0.
Counter signal	Analog input / bit memory Event counter / usage meter	Counter input. The block counts the positive edges (0 → 1) at the input and calculates the frequency from this.

Parameters	Tag type / range of values	Description
Output parameters		
Frequency	Analog memory bit • Configured as a floating-point number: 3.402823 e-38 .. 3.402823 e+38 • Configured as a counter: 0 .. 4294967295	Tag in which the calculated frequency value is output.
Value valid	Digital output / bit memory	Tag in which the the validity identifier of the frequency value calculated by the block is output: • 1 = The calculated value is valid and can be used. • 0 = The calculated value is invalid.
Error	Digital output / bit memory	Error display: • 0: Block processing completed without errors • 1: Block processing aborted with an error For the meaning, see Often used parameters (Page 158).

5.6.4 Flow measurement

Flow measurement

Function

The block counts the positive edges at the input parameter "Counter signal" and converts the number of pulses per time unit to a volume flow (Q/t).

After running through a complete count interval, the calculated volume flow is output at the "Flow" output and the "Value valid" output is set to 1.

Via the "Reset" input parameter, the counter and the validity are reset to 0.

Count interval and validity

The block counts the edge changes over the period of the configured update cycles that are configured for the input of the block (count interval).

The length of the count interval is the product of the update cycle and the reduction factor for the update cycle.

If the count interval has not yet been run through, the output "Value valid is set to 0.

If the count interval has been run through competely, the output "Value valid is set to 1.

Example:
The basic cycle is configured at 10 seconds, the reduction factor is configured at 4. The count interval for this input therefore takes 40 seconds. After the first, second and third update cycle (after 10, 20, 30 seconds) the "Value valid" output is set to 0. Only after the 4th count interval (after 40 seconds) is the "Value valid" output set to 1 and the "Flow" output can be further processed.

Parameters

Parameters	Tag type / range of values	Description
Input parameters		
En		Enable parameter, see section Often used parameters (Page 158).
Reset	True / False Digital input / output / bit memory STATUS_ERROR	Resets the counter to 0 on a positive edge (0 → 1). With the setting "True" the counter is continuously reset and the output remains permanently set to 0. With the setting "Input unused" or "False", the count is not reset. If there is overflow (4294967295) the counter starts again at zero.
Counter signal	Analog input / bit memory Event counter / usage meter	Counter input. The block counts the positive edges (0 → 1) at the input and calculates the volume flow from this number and the function parameters.
Function parameters		
Pulse weighting: number of pulses	1 .. +4294967295	Number of pulses (n) included in the required value for the pulse weighting (Q/n). *
Pulse weighting: amount	3.402823 e-38 .. 3.402823 e+38 Max. 19 characters, display of max. 4 decimal places.	Amount (Q) included in the required value for the pulse weighting (Q/n). *
Output parameters		
Flow	Analog memory bit • Configured as a floating-point number: 3.402823 e-38 .. 3.402823 e+38 • Configured as a counter: 0 .. 4294967295	Tag in which the totaled flow value is output.

Parameters	Tag type / range of values	Description
Value valid	Digital output / bit memory	Tag in which the the validity identifier of the flow value calculated by the block is output: • 1 = The calculated value is valid and can be used. • 0 = The calculated value is invalid or the calculation is not yet completed.
Error	Digital output / bit memory	Error display: • 0: Block processing completed without errors • 1: Block processing aborted with an error For the meaning, see Often used parameters (Page 158).

* Note: The values of the two parameters of the pulse weighting are limited together to 50000. A maximum of 50 Hz are processed over 10 seconds.

5.7 Blocks for messages

5.7.1 Sending SMS messages

Sending SMS messages

Function

When a configurable event occurs, transfers an SMS message for sending.

Parameters

Parameters	Tag type / range of values	Description
Input parameters		
En		Enable parameter, see section Often used parameters (Page 158).
Trigger	True / False Digital input / output / bit memory STATUS_ERROR	Event (edge change 0 → 1), that triggers the creation of the message. The input must be reset to 0 by the user.
Send Immediately	True / False Digital input / output / bit memory STATUS_ERROR	When there is an edge change 0 → 1 the message is transferred for sending. With the setting "True", the message is always transferred immediately for sending. With the setting "Input unused" or "False", the message is transferred for sending when the RTU establishes the next mobile wireless connection. The input parameter must be reset to 0 by the program.

Parameters	Tag type / range of values	Description
Function parameters		
Recipient	"Recipient group"	Selection of the user groups configured in "Users / groups"
Text	"Texts"	Selection of a message text configured in "Tags" > "Texts"
Output parameters		
Done	Digital output / bit memory	Status display: • 0: Message could not be transferred to the transfer buffer. The buffer is possibly full. • 1: Message could be transferred successfully to the transfer buffer.
Error	Digital output / bit memory	Error display: • 0: Block processing completed without errors • 1: Block processing aborted with an error SMS message could not be saved. See also section Often used parameters (Page 158).

5.7.2 Send e-mail

Send e-mail

Function

When a configurable event occurs, transfers an e-mail message for sending.

Parameters

Parameters	Tag type / range of values	Description
Input parameters		
En		Enable parameter, see section Often used parameters (Page 158).
Trigger	True / False Digital input / output / bit memory STATUS_ERROR	Event that triggers the creation of the message.
Send Immediately	True / False Digital input / output / bit memory STATUS_ERROR	When there is an edge change 0 → 1 the message is transferred for sending. With the setting "True", the message is always transferred immediately for sending. With the setting "Input unused" or "False", the message is transferred for sending when the RTU establishes the next mobile wireless connection. The input parameter must be reset to 0 by the program.

Parameters	Tag type / range of values	Description
Function parameters		
Recipient	"Recipient group"	Selection of the user groups configured in "Users / groups"
Text	"Texts"	Selection of a message text configured in "Tags" > "Texts"
Attachment	• No attachment • Entire diagnostics buffer • Current log file • Current process image	You have the option of attaching a file stored on the RTU to the e-mail.
Anhang gezippt	ON / OFF	Adds the file to the attachment as a compressed zip archive.
Output parameters		
Done	Digital output / bit memory	Status display: • 0: Message could not be transferred to the transfer buffer. The buffer is possibly full. • 1: Message could be transferred successfully to the transfer buffer.
Error	Digital output / bit memory	Error display: • 0: Block processing completed without errors • 1: Block processing aborted with an error E-mail could not be saved. See also section Often used parameters (Page 158).

5.8 Relay blocks

5.8.1 Latching relays

Latching relays

Function

The input parameters "Set" and "Reset" set the output to 1 or 0:

- Set

  A positive edge (0 → 1) sets the output to 1.
- Reset

  A positive edge (0 → 1) sets the output to 0.

The parameters "Set" and "Reset" both have a latching function.

When "Set" and "Reset" have the same value (both = 0 or both = 1) the switching of the output is controlled by the function parameter "RS/SR priority":

- SR: The output is set to 1.
- RS: The output is set to 0.

Status table:

RS/SR priority	Value of "Reset"	Value of "Set"	Value of the output	Remark
RS / SR	0	0	-	The value of the output remains unchanged.
RS / SR	1	0	0	Value of the output regardless of RS/SR priority
RS / SR	0	1	1	Value of the output regardless of RS/SR priority
RS	1	1	0	
SR	1	1	1	

Diagrams

The two following diagrams in which the RS/SR priority is programmed differently are examples showing the effect on the output.

The blue arrows indicate value changes of the output Q that are caused by the programming of the RS/SR priority.

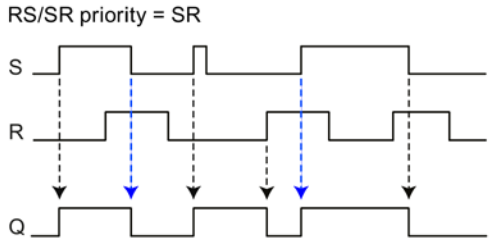

S Set
R Reset
Q Output

Figure 5-8 Switching diagram of a block "Latching relay", RS/SR priority = SR

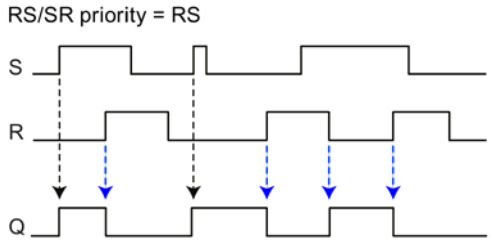

S Set
R Reset
Q Output

Figure 5-9 Switching diagram of a block "Latching relay", RS/RS priority = RS

Parameters

Parameters	Tag type / range of values	Description
Input parameters		
En		Enable parameter, see section Often used parameters (Page 158).
Set	True / False Digital input / output / bit memory STATUS_ERROR	Sets the output to 1 on a positive edge (0 → 1). With the setting "True", the output remains permanently at 1. Resetting via the "Reset" input is then only possible when "RS/SR priority" = RS.
Reset	True / False Digital input / output / bit memory STATUS_ERROR	Resets the "Set" input to 0 on a positive edge (0 → 1). With the setting "True", "Set" is permanently reset if the "RS/SR priority" = RS. The output remains permanently set to 0. With the setting "True", "Set" is processed if the "RS/SR priority" = SR. With the setting "unused" or "False", the "Set" input is not reset.

Parameters	Tag type / range of values	Description
Function parameters		
RS/SR priority	• SR • RS	• SR If "Set" and "Reset" have the same value, "SR" causes the output to be set to 1. • RS If "Set" and "Reset" have the same value, "RS" causes the output to be set to 0.
Output parameters		
Output	Digital output / bit memory	Tag for the output.

5.8.2 Current impulse relay

Current impulse relay

Function

The input parameters "Set" and "Reset" set the output to 1 or 0:

- Set

  A positive edge (0 → 1) sets the output to 1.
- Reset

  A positive edge (0 → 1) sets the output to 0.

As with the latching relay (see above) the parameters "Set" and "Reset" both have a latching function.

When "Set" and "Reset" have the same value (both = 0 or both = 1) the switching of the output is controlled by the function parameter "RS/SR priority":

- SR: The output is set to 1.
- RS: The output is set to 0.

The "Trigger" input causes a status change at the output regardless of its previous status.

- Output = 0: A positive edge at the "Trigger" input sets the output to 1.
- Output = 1: A positive edge at the "Trigger" input sets the output to 0.

The "Trigger" input has the function of a button. A tag can be connected to its input that generates short pulses (current impulses).

Diagram

The following diagram shows an example of the effect on the output.

The blue arrow indicates a value change of the output Q that is caused by the programming of the RS/SR priority.

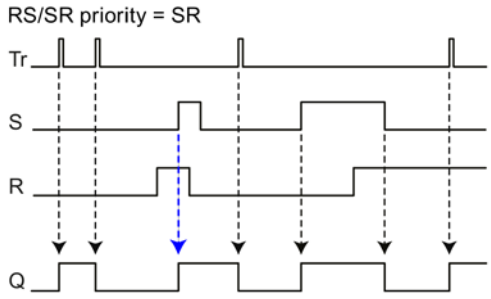

Tr Trigger
S Set
R Reset
Q Output

Figure 5-10 Switching diagram of a block "Current impulse relay", RS/SR priority = SR

Parameters

Parameters	Tag type / range of values	Description
Input parameters		
En		Enable parameter, see section Often used parameters (Page 158).
Set	True / False Digital input / output / bit memory STATUS_ERROR	Sets the output to 1 on a positive edge (0 → 1). With the setting "True", the output remains permanently at 1. Resetting via the "Reset" input is then only possible when "RS/SR priority" = RS. With the setting "Unused" or "False", the output is only controlled by the inputs "Reset" and "Trigger".
Reset	True / False Digital input / output / bit memory STATUS_ERROR	On a positive edge (0 → 1) resets the output to 0 when "Set" = 0 or when the "RS/SR priority" = RS. With the setting "True" "Set" is permanently reset and the output remains permanently set to 0. With the setting "unused" or "False", the "Set" input is not reset. With the setting "Unused" or "False", the output is only controlled by the inputs "Reset" and "Trigger".
Trigger	True / False Digital input / output / bit memory STATUS_ERROR	The edge change 0 → 1 of "Trigger" has the following effect: • When "Set" and "Reset" = 0, the output is set to 1. • When "Set" and "Reset" = 1 and the "RS/SR priority" = SR, the output is set to 1. • When "Set" and "Reset" = 1 and the "RS/RS priority" = RS, the output is set to 0. • If only "Set" = 1, the output remains at 1. • If only "Reset" = 1, the output remains at 0. The edge change 1 → 0 of "Trigger" has no effect:

Parameters	Tag type / range of values	Description
Function parameters		
RS/SR priority	• SR • RS	• SR If "Set" and "Reset" have the same value, "SR" causes the output to be set to 1. • RS If "Set" and "Reset" have the same value, "RS" causes the output to be set to 0.
Output parameters		
Output	Digital output / bit memory	Tag for the output.

Diagnostics and maintenance 6

6.1 Diagnostics options

The following diagnostics options are available:

LEDs of the module

For information on the LED displays, refer to the section LEDs (Page 34).

Web Based Management (WBM)

To do this, you need to connect your PC to the RTU locally or via the mobile wireless network.

In the WBM area Diagnostics", you will find the diagnostics messages and the setting options for sending messages if errors occur (see below).

On the following WBM pages you obtain information on the status of the RTU:

- You will find general information on the status of the RTU on the start page of the WBM, refer to the section Status (Page 74).
- You will find information about the system load of the RTU on the WBM page for the system, refer to the section Device info (Page 77).
- You will find the diagnostics messages on the diagnostics page of the WBM, refer to the section Diagnostics buffer (Page 83).

Diagnostics messages

When important events occur, the RTU writes diagnostics messages to its diagnostics buffer. The diagnostics messages are divided into 4 classes, see section Diagnostics buffer (Page 83).

You can read out or transfer diagnostics messages using the following mechanisms:

- Reading out the diagnostics buffer using the WBM

  For details, see section Diagnostics buffer (Page 83).
- Transferring diagnostics messages relating to errors by SMS message or e-mail

  Errors can be sent as a message (SMS or e-mail). You will find the description in the section Notifications (Page 84).

Diagnostics SMS message

Apart from the configurable sending of the diagnostics buffer, the RTU can send standardized diagnostics SMS messages on request. A diagnostics SMS message is sent to a telephone with an unauthorized phone number if it receives an SMS message with the following text from this phone:

```
DIAG?
```

The diagnostics SMS message contains the following data:

- Station name
- Firmware version of the RTU
- Status of the mobile wireless network connection (connected / not connected)
- Mobile wireless standard
- Duration of the last mobile wireless connection

  The data is specified in the following format: "Attached for ddd:hh:mm:ss"

  If the last attempted dial-in to the mobile wireless network was not successful, "Attached for -" is sent.
- IP address of the RTU
- Signal strength of the mobile wireless network and the RSSI (received field strength at the station)

  Indication of the signal strength:

  – good: Good signal quality (≥ -79 dBm)

  – medium: Medium signal quality (-95 .. -81 dBm)

  – weak: Bad signal quality (≤ -97 dBm)

    Values ≤ -97 dBm do not allow reception.

  Indication of the RSSI (Received Signal Strength Indication): [0 ... 31]; 99 = signal cannot be measured.

If the data to be sent exceeds the default size of an SMS message, several SMS messages are sent.

6.2 Loading firmware

New firmware versions

If a new firmware version is available for the module, you will find this on the Internet pages of Siemens Industry Online Support under the following ID:

Link: (https://support.industry.siemens.com/cs/ww/en/ps/15920/dl)

Save the firmware file on the PC with the configuration data of the RTU.

Downloading new firmware files

You load a new firmware file from the configuration PC on the RTU via the WBM.

You will find a description of establishing the connection to the RTU from the configuration PC in the section Establishing a connection to the WBM of the RTU (Page 68).

You will find a description of loading a firmware file via the WBM of the RTU in the section Firmware (Page 87).

6.3 Resetting to factory settings

Resetting to factory settings: Effect

Note

Data on the RTU will be deleted

With the functions for resetting to factory settings described here, all configuration data and process data on the RTU is deleted!

Note

RTU no longer reachable via VPN

When you reset to factory settings, the VPN configuration is deleted and the RTU is no longer reachable via VPN.

- **Deleted data**

  The following data is deleted by resetting to factory settings:

  – IP address of the LAN interface configured by the user

    It is reset to the default factory set IP address 192.168.0.3.

  – All other configuration data in the memory of the RTU

  – All process data in the memory of the RTU

  – Configuration data on a plugged in SD card. The file "default.cfg" on the SD card is deleted.

- **Data not deleted**

  The following data is not deleted by resetting to factory settings:

  – MAC address of the LAN interface:

  – Process data on the SD card

  – A manually created configuration file "user.cfg" on the SD card

Executing the "Reset to factory settings" function

Two methods are available for resetting to factory settings:

- **Resetting using the WBM**

  For a description of the procedure, refer to the section Operating status (Page 89).

- **Resetting using the "WKUP/RESET" button**

  For the number of times and duration of pressing the button, refer to the section The button "WKUP/RESET" (Page 40).

For the LED reactions during resetting and restarting, refer to the section LEDs (Page 34).

Reaction after resetting to factory settings

After the reset, the RTU starts up again automatically. The remaining behavior depends on the use of an optional SD card:

- **Startup without SD card**
  - If you do not use an SD card, the RTU remains in service mode without configuration data. The STATUS LED flashes red.
  - The RTU is reachable locally via the following default IP address set in the factory 192.168.0.3 or the DNS name "simatic.rtu".
  - DHCP is enabled.
  - The RTU starts up without configuration data.

    Generally, the defaults apply during the first commissioning, refer to the section Establishing a connection to the WBM of the RTU (Page 68).

- **Startup with SD card**

  If an SD card is plugged in, the RTU searches the SD card for the configuration file "default.cfg" which was deleted during the reset.

  A configuration file "user.cfg" saved on the SD card by the user is not used.

  The RTU remains in service mode. The STATUS LED flashes red.

  If you turn off the RTU after the reset, and then start it up with an SD card plugged in with a configuration file "default.cfg", the RTU uses the configuration file "default.cfg". See also section Commissioning and starting up the RTU (Page 58).

6.4 Replacing the RTU

Replacing the RTU

⚠ WARNING
Read the safety notices Before changing the RTU, read the safety notices in the section Important notes on using the device (Page 43). While working on the device make sure that the power supply is turned off.

When replacing the RTU follow the steps described in the section Connecting up, installation, commissioning (Page 43).

When replacing the RTU, remember to take the SIM card from the old device and insert it in the new one.

Transferring the configuration data to the new RTU

The procedure for transferring the configuration data to the RTU depends on whether you use an SD card in the RTU:

- **Device replacement without SD card**

  If you do not use an SD card, transfer the configuration data from the configuration PC to the new RTU before replacing the device.

  When you create the configuration data using the WBM of the RTU, you have the option of saving the configuration data on the configuration PC.

- **Device replacement with SD card**

  If you have used an SD card in the old RTU, after turning off the power supply remove the card from the old RTU and insert it in the new RTU before connecting up and installing it.

  When it restarts, the RTU reads the configuration data from the SD card.

6.5 Batteries: Replacement, recycling and disposal

The RTU can be supplied optionally with one or two battery modules, see appendix Battery module (Page 221).

Handling batteries

WARNING

Risk of explosion and danger of release of harmful substances!

Do not throw batteries into a fire, do not solder the body of the cell, do not open batteries, do not short-circuit batteries, do not reverse the polarity of batteries, do not heat batteries above 100 °C.

Protect batteries from direct sunlight, dampness and condensation.

Dispose of batteries according to the regulations.

Replacing batteries

To replace a battery you first need to disconnect the battery module from the RTU in the WBM configuration and after replacing the battery reconnect it in the WBM. For a description of the procedure, refer to the section Power supply (Page 114).

You will find information on the recommended intervals for changing the batteries in the section Battery: Estimating the working life (Page 117).

For a description of mounting the battery modules, refer to the section Installing an RTU (Page 49).

Recycling / disposal

Batteries and rechargeable batteries can be recycled. Their components can be used as raw materials for new batteries/rechargeable batteries or other products. Effective recycling procedures are only possible if batteries of the used batteries of the same type are collected together.

Note

Regulations for disposal of batteries

Keep to the local regulations for the recycling and disposal of batteries.

Technical data

7

Table 7- 1 SIMATIC RTU3030C

Technical specifications - RTU3030C		
Article number	6NH3112-3BA00-0XX0	
CPU		
Number of program block types	30	
Number of configurable program blocks	Max. 32	
Internal memory for user and configuration data	Type:	Flash EEPROM
Internal memory for process data	Type:	SRAM
Optional: External memory for process, diagnostics and configuration data	SD card not included with the product, see accessories.	
Internal clock of the RTU		
Clock type	RTC	
Accuracy	54 s per month (+ deviation due to aging of 8 s per year)	
Can be synchronized using:	• Mobile wireless service NITZ • SNTP • Communications partner of the RTU	
Cable lengths		
Permitted cable lengths	All cables for: • Power supply • Inputs • Outputs • LAN (Ethernet connection) • Antenna	Max. 30 m in each case
Power supply, current consumption and power loss		
Power supply from external source via terminal block X10	Power supply	12 - 24 VDC
	Permitted range	10.8 .. 28.8 V
	Design	Connector with terminal block, 5 terminals, protected against reverse polarity: • 1 input X10 IN (L+, M) • 1 output X10 CTRL (L+, M)
	Possible cable cross-section • Minimum • Maximum	 • 0.2 mm^2 (28 AWG) • 1.5 mm^2 (16 AWG)
	Max- tightening torque of the screw terminals	0.56 .. 0.79 Nm (5 .. 7 in lbs)

Technical specifications - RTU3030C		
Power supply from the battery module *	Battery modules are not supplied with the device. See Accessories, section Battery module (Page 221).	
	Supply voltage nominal	7.8 V
Current consumption (without connected consumers with minimum configuration)	In "sleep mode"	• With battery operation (7.8 VDC): 0.25 mA (typ.) • With ext. supply (24 VDC): 14 mA (typ.)
	In "update mode"	• With battery operation (7.8 VDC): 65 mA (typ.) • With ext. supply (24 VDC): 35 mA (typ.)
	In "communication mode"	• With battery operation (7.8 VDC): 192 mA (typ.) • With ext. supply (24 VDC): 83 mA (typ.)
Effective power loss (without connected consumers with minimum configuration)	In "sleep mode"	• With battery operation (7.8 VDC): 2 mW (typ.) • With ext. supply (24 VDC): 340 mW (typ.)
	In "update mode"	• With battery operation (7.8 VDC): 510 mW (typ.) • With ext. supply (24 VDC): 850 mW (typ.)
	In "communication mode"	• With battery operation (7.8 VDC): 1500 mW (typ.) • With ext. supply (24 VDC): 2000 mW (typ.)
Control output (X10)		
Control and supply of external devices	Regulated, short-circuit proof, can be configured alternatively, for all outputs: • 12 VDC • 24 VDC	
Maximum Power	See below (power)	
Control output (X11)		
Control and supply of sensors / switches for digital inputs / outputs	Regulated, short-circuit proof, can be configured alternatively, for all outputs: • 12 VDC • 24 VDC	
Maximum Power	See below (power)	
Digital inputs (X20, X21, X22, X23)		
Quantity	8	
Type and material	Schmitt trigger input with an internal pull-up resistor. Can be switched via open drain transistors, relays or switches.	
Connection type	2-wire technology	
Level logical = 1 when:	Contact closed (≤ 0.4 V)	
Level logical = 0 when:	Contact open	
Configurable input types	• Binary input – Minimum pulse length for binary input: 2 ms Minimum pulse length in sleep mode or with logging activated: 100 ms – Filter time: 40 µs • Counter input – Input clock frequency: 1 .. 5000 Hz – A debounced signal transmitter is necessary.	

Technical specifications - RTU3030C		
Digital outputs (X30, X31)		
Quantity	4	
Type and material	Relay, silver/nickel gold plated	
Connection type	2-wire technology	
Level logical = 1 when:	Contact closed	
Level logical = 0 when:	Contact open	
Maximum switching frequency	1 Hz	
Limit permanent current	300 mA	
Max. switched current	300 mA	
Max. switching voltage	• 60 VDC • 30 VAC effective (42.2 V peak voltage with non-sine-shaped voltage)	
Max. switching capacity	18 W (at 60 VDC)	
Mechanical lifetime of the contacts (typ.)	10^8 switching cycles	
Electrical lifetime of the contacts (typ.)	• At 12 V / 10 mA: • At 6 V / 100 mA: • At 60 V / 300 mA:	• 5 x 10^7 switching cycles • 1 x 10^7 switching cycles • 5 x 10^5 switching cycles
Analog inputs (X41, X43)		
Quantity	4	
Connection type	2-/3-/4-wire technology (L+, M, X+, X-)	
Configurable input signals (typ, range)	• Current • Voltage • Temperature (Pt1000)	• 0/4 .. 20 mA • 0 .. 5/10 V • -80 ... +140 °C / -112 .. +284 °F
Accuracy	• Current • Voltage • Temperature	• 1 % • 1 % • 1 %
Resolution	12 bits (0 .. 4095)	
Input resistance	• 580 kΩ (voltage measurement) • 243 Ω (current measurement)	
Analog inputs - 12/24 V control output for sensors (X40, X42)		
Power supply at terminal L+	Regulated, short-circuit proof, can be configured alternatively, for all outputs: • 12 VDC • 24 VDC	
Maximum Power	See below (power)	
Power		
Maximum power of all outputs (X10 + X11 + X40 + X42)	Alternative: • 7.2 W at 24 V • 3.6 W at 12 V With a total of max. 300 mA over all outputs	

Technical specifications - RTU3030C		
Antenna connector / wireless interface (XR1A1)		
Frequency bands	UMTS	B1 (2100 MHz) B8 (900 MHz)
	GSM	GSM (850/900 MHz) DCS (1800 MHz) PCS (1900 MHz)
Antenna connector	Quantity	1
	Design	SMA socket
	Nominal impedance	50 Ω
Maximum transmit power	WCDMA FDD (B1, B2, B5, B8)	+24 dBm (Class 3)
	EDGE 1800/1900 MHz	+26 dBm (Class E2)
	EDGE 850/900 MHz	+27 dBm (Class E2)
	DCS 1800, PCS 1900	+30 dBm (Class 1)
	GSM 850/900	+33 dBm (Class 1)
HSPA (UMTS)	Transmission speed (maximum)	• Downlink (HSDPA): 42 Mbps • Uplink (HSUPA): 5.76 Mbps
EDGE (GSM)	Properties	• Multislot class 10 end device class B coding scheme 1 to 9 (GMSK)
	Transmission speed	• Downlink: 236.8 kbps • Uplink: 236.8 kbps
GPRS (GSM)	Properties	• Multislot class 10 end device class B coding scheme 1 to 4 (GMSK)
	Transmission speed	• Downlink: 85.6 kbps • Uplink: 85.6 kbps
SMS	Mode outgoing	MO (mobile originated)
	Service	Point-to-point
Attachment to Industrial Ethernet (X1P1)		
Quantity	1	
Design	RJ-45 jack	
Properties	100BASE-TX, IEEE 802.3-2005, half duplex/full duplex, autocrossover, autonegotiation, galvanically isolated	
Transmission speed	10 / 100 Mbps	
Permitted ambient conditions		
Ambient temperature	During operation with the DIN rail installed horizontally	-40 °C .. +70 °C
	During operation with the DIN rail installed vertically	-40 °C .. +60 °C
	During storage	-40 °C .. +70 °C
	During transportation	-40 °C .. +70 °C

Technical specifications - RTU3030C		
Relative humidity	During operation	≤ 95% at 30 °C, no condensation
	During storage	≤ 95% at 25/55 °C, no condensation
Design, dimensions and weight (without battery modules and outer housing) **		
Design	Compact module for DIN rail mounting	
Degree of protection	IP20	
Weight	370 g	
Dimensions (W x H x D) (without terminal blocks of the connectors)	130 x 100 x 75 mm	
Installation options	Standard 35 mm DIN rail	

***** You will find the technical specifications of the battery module and the battery in the section Battery module (Page 221).

****** You will find the technical specifications of the outer housing appendix in the section Protective housing (Page 228).

You will find additional functions and performance data of the RTU in the section Application and properties (Page 11).

You will find information on the underrange/overrange and underflow/overflow of the analog inputs in the section Analog inputs (Page 125).

Approvals

A

Approvals issued

Note

Issued approvals on the type plate of the device

The specified approvals apply only when the corresponding mark is printed on the product. You can check which of the following approvals have been granted for your product by the markings on the type plate.

EC declaration of conformity

The RTU meets the requirements and safety objectives of the following EC directives and it complies with the harmonized European standards (EN) for programmable logic controllers which are published in the official documentation of the European Union.

- **94/9/EC (ATEX explosion protection directive)**

  Directive of the European Parliament and the Council of 23 March 1994 on the approximation of the laws of the Member States concerning equipment and protective systems intended for use in potentially explosive atmospheres

- **1999/5/EC (R&TTE)**

  Directive of the European Parliament and of the Council of 9 March 1999 on Radio Equipment and Telecommunications Terminal Equipment and the mutual recognition of their conformity

- **2011/65/EU (RoHS)**

  Directive of the European Parliament and of the Council of 8 June 2011 on the restriction of the use of certain hazardous substances in electrical and electronic equipment

The EC Declaration of Conformity is available for all responsible authorities at:

Siemens Aktiengesellschaft
Process Industries and Drives
Process Automation
DE-76181 Karlsruhe
Germany

You will find the EC Declaration of Conformity for this product on the Internet at the following address:

Link: (https://support.industry.siemens.com/cs/ww/en/ps/15920/cert)

> Entry type: "Certificates", certificate type: "EC Declaration of Conformity"

IECEx

The product meets the requirements of explosion protection according to IECEx.

IECEx classification: Ex nA IIC T4 Gc

The product meets the requirements of the following standards:

- EN 60079-0

  Hazardous areas - Part 0: Equipment - General requirements

- EN 60079-15

  Explosive atmospheres - Part 15: Equipment protection by type of protection 'n'

The current versions of the standards can be seen in the currently valid version of the IECEx certificate DEK 14.0088X.

ATEX

The RTU meets the requirements of the EC directive 94/9/EC "Equipment and Protective Devices for Use in Potentially Explosive Atmospheres".

Applied standards:

- EN 60079-0

  Hazardous areas - Part 0: Equipment - General requirements

- EN 60079-15

  Explosive atmospheres - Part 15: Equipment protection by type of protection 'n'

The current versions of the standards can be seen in the EC Declaration of Conformity, see above.

ATEX approval: II 3 G Ex nA IIC T4 Gc

Test number: KEMA 03ATEX1228 X

Over and above this, the following conditions must be met for the safe deployment of the RTU according to the section Notices on use in hazardous areas according to ATEX / IECEx (Page 44).

You should also note the information in the document "Use of subassemblies/modules in a Zone 2 Hazardous Area" that you will find on the Internet at the following address:

Link: (http://support.automation.siemens.com/WW/view/en/78381013)

R&TTE

The RTU meets the requirements of the EC directive 1999/5/EC "Radio equipment and telecommunications terminal equipment" according to the requirements of article 3 (1) a, 3 (1) b and 3 (2).

Article 3 (1) a - Health and Safety

Harmonized standards:

- EN 60950-1:2006+A11:2009+A1:2010+A12:2011+A2:2013

  Information technology equipment - Safety - Part 1: General requirements

- EN 62311:2008

  Assessment of electronic and electrical equipment related to human exposure restrictions for electromagnetic fields (0 Hz ... 300 GHz)

Art. 3 (1) b - EMC

Harmonized standards:

- ETSI EN 301 489-1 V1.9.2

  Electromagnetic compatibility and radio spectrum matters (ERM) - Electromagnetic compatibility for radio equipment and services - Part 1 : Common technical requirements

- ETSI EN 301 489-7 V1.3.1

  Electromagnetic compatibility and radio spectrum matters (ERM) - Electromagnetic compatibility for radio equipment and services - Part 7 : Specific conditions for mobile and portable radio and ancillary equipment of digital cellular radio telecommunications systems (GSM and DCS)

- ETSI EN 301 489-24 V1.5.1

  Electromagnetic compatibility and radio spectrum matters (ERM) - Electromagnetic compatibility for radio equipment and services - Part 24 : Specific conditions for mobile and portable IMT-2000 CDMA Direct Spread (UTRA) radio and ancillary equipment

- EN 61000-6-2:2005+AC:2005

  Electromagnetic compatibility (EMC) - Part 6-2: Generic standards - Immunity for industrial environments

Art. 3 (2) Measures for efficient use of the frequency spectrum

Harmonized standards:

- ETSI EN 301 511 V9.0.2

  Global system for mobile communication (GSM). Harmonized standard for mobile phones in the GSM 900 and GSM 1800 bands covering essential requirements of article 3.2 of the R&TTE directive.

- ETSI EN 301 908-1 V6.2.1

  IMT cellular networks - Harmonized standard covering the essential requirements of article 3.2 of the R&TTE directive. Part 1: Introduction and common requirements

- ETSI EN 301 908-2 V6.2.1

  IMT cellular networks. Harmonized standard covering the essential requirements of article 3.2 of the R&TTE directive. Part 2: CDMA Direct Spread (UTRA FDD) User Equipment (UE)

Maximum antenna gain

Users and installers must be provided with antenna installation instructions and transmitter operating conditions that must be followed to avoid exceeding the permitted RF exposure.

In this respect, note the technical specifications of the antenna, see appendix Antenna ANT794-4MR (Page 225).

RoHS

The RTU meets the requirements of the EU directive 2011/65/EC on the restriction of the use of certain hazardous substances in electrical and electronic equipment.

Applied standard:

- EN 50581:2012

cULus

Underwriters Laboratories Inc. meets

- Underwriters Laboratories, Inc.: UL 61010-1 (Safety Requirements for Electrical Equipment for Measurement, Control, and Laboratory Use - Part 1: General Requirements) + IEC/UL 61010-2-201 (Safety requirements for electrical equipment for measurement, control and laboratory use. Particular requirements for control equipment)
- Canadian Standards Association: CSA C22.2 No. 61010-1-12 / CSA-IEC 61010-2-201

cULus HAZ.LOC.

Underwriters Laboratories Inc. meets

- ISA 12.12.01 (Nonincendive Electrical Equipment for Use in Class I and II, Division 2 and Class III, Divisions 1 and 2 Hazardous (Classified) Locations)
- CSA C22.2 No. 213 (Hazardous Location)

APPROVED for Use in:

- Cl. 1, Div. 2, GP. A, B, C, D T4A; Ta = -40 °C...+70 °C
- Cl. 1, Zone 2, GP. IIC T4; Ta = -40 °C...+70 °C

FM

Factory Mutual Research (FM)
Approval Standard Class number 3600 and 3611
Approved for use in:
Class I, Division 2, Group A, B, C, D, Temperature Class T4A, Ta = 70 °C
Class I, Zone 2, Group IIC, Temperature Class T4, Ta = 70 °C

RCM

The RTU meets the requirements of the AS/NZS 2064 standards (Class A).

National wireless approvals

To operate the CP in certain countries approvals for wireless operation must exist, the agreed marking must be present on the type plate and special instructions for the particular country must be adhered to. The national approvals and instructions are shown below.

India

ETA: XXX/20XX/XXXX

Canada

CONTAINS IC: 5131A-HE910

IC statement:

This device complies with part 15 of the FCC Rules and Industry Canada license-exempt RSS standard(s). Operation is subject to the following two conditions:
(1) This device may not cause harmful interference, and
(2) this device must accept any interference received,
including interference that may cause undesired operation.

Le présent appareil est conforme aux CNR d'Industrie Canada applicables aux appareils radio exempts de licence. L'exploitation est autorisée aux deux conditions suivantes :
(1) l'appareil ne doit pas produire de brouillage, et
(2) l'utilisateur de l'appareil doit accepter tout brouillage radioélectrique subi,
même si le brouillage est susceptible d'en compromettre le fonctionnement.

Mexico

La operación de este equipo está sujeta a las siguientes dos condiciones:

(1) es posible que este equipo o dispositivo no cause interferencia perjudicial y

(2) este equipo o dispositivo debe aceptar cualquier interferencia, incluyendo la que pueda causar su operación no deseada.

USA

CONTAINS FCC-ID: RI7HE910

FCC statement:
"This device complies with part 15 of the FCC Rules. Operation is subject to the following two conditions:
(1) This device may not cause harmful interference, and
(2) this device must accept any interference received, including interference that may cause undesired operation.
Changes or modifications not expressly approved by the party responsible for compliance could void the user's authority to operate the equipment."

Additional statement for Digital Devices / Computer Peripheral Devices
FCC §15.105 statement:
"This equipment has been tested and found to comply with the limits for a Class B digital device, pursuant to part 15 of the FCC Rules. These limits are designed to provide

reasonable protection against harmful interference in a residential installation. This equipment generates, uses and can radiate radio frequency energy and, if not installed and used in accordance with the instructions, may cause harmful interference to radio communications. However, there is no guarantee that interference will not occur in a particular installation. If this equipment does cause harmful interference to radio or television reception, which can be determined by turning the equipment off and on, the user is encouraged to try to correct the interference by one or more of the following measures:
- Reorient or relocate the receiving antenna.
- Increase the separation between the equipment and receiver.
- Connect the equipment into an outlet on a circuit different from that to which the receiver is connected.
- Consult the dealer or an experienced radio/TV technician for help."

Country-specific mobile wireless approvals of SIMATIC NET devices

You will find an overview of the mobile wireless approvals of the SIMATIC NET devices for specific countries here:
Link: (www.siemens.com/simatic-net/ik-info)
Presales Support: +49 911/895-2905; presales.ci.industry@siemens.com

Current approvals

SIMATIC NET products are regularly submitted to the relevant authorities and approval centers for approvals relating to specific markets and applications.

If you require a list of the current approvals for individual devices, consult your Siemens contact or check the Internet pages of Siemens Industry Online Support:

Link: (http://support.automation.siemens.com/WW/view/en/45605894)

Overview of the approvals for SIMATIC NET products

You will find an overview of the approvals for SIMATIC NET products including approvals for shipbuilding on the Internet pages of Siemens Industry Online Support under the following address:

Link: (https://support.industry.siemens.com/cs/ww/en/view/57337426)

Dimension drawings

B

Note

All dimensions in the dimension drawings are in millimeters.

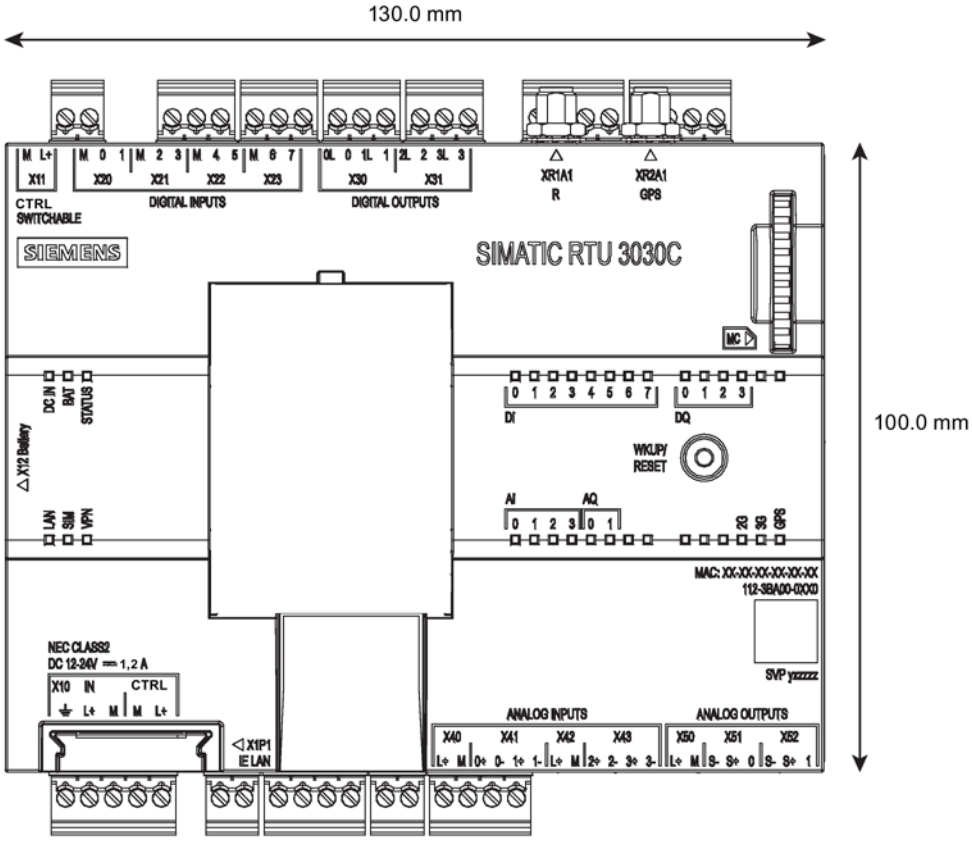

Figure B-1 Front view

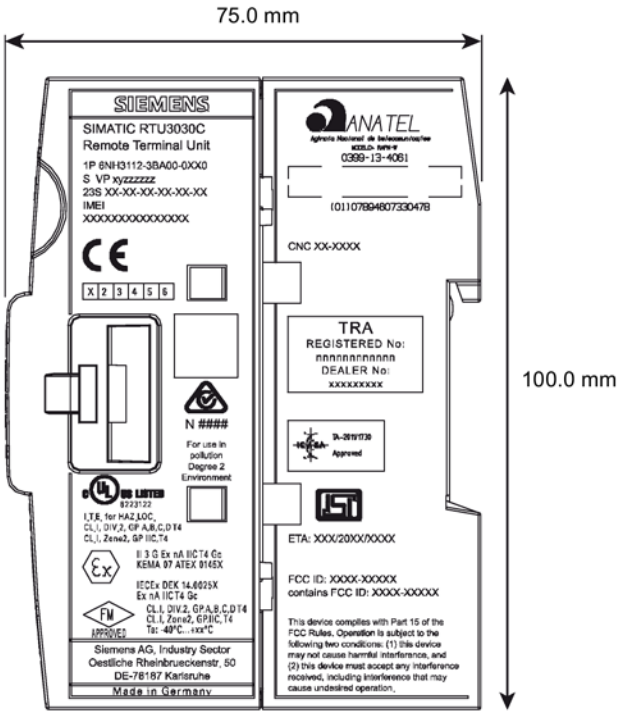

Figure B-2 Side view

Accessories

C

C.1 Battery module

For the power supply of the RTU an optional battery module is available that does not ship with the RTU.

The battery module can be used as an alternative or in addition to an external power supply.

The complete battery module is made up of the following components that can be ordered separately:

- Housing
- Battery

One or two modules can be connected to the RTU. For an estimation of the working life of a battery, refer to the section Battery: Estimating the working life (Page 117).

When two battery modules are used, module 1 initially supplies the RTU (in the figure below the right-hand module). When a critical charge status in module 1 is reached, there is an automatic switchover to battery module 2 (on the left in the figure).

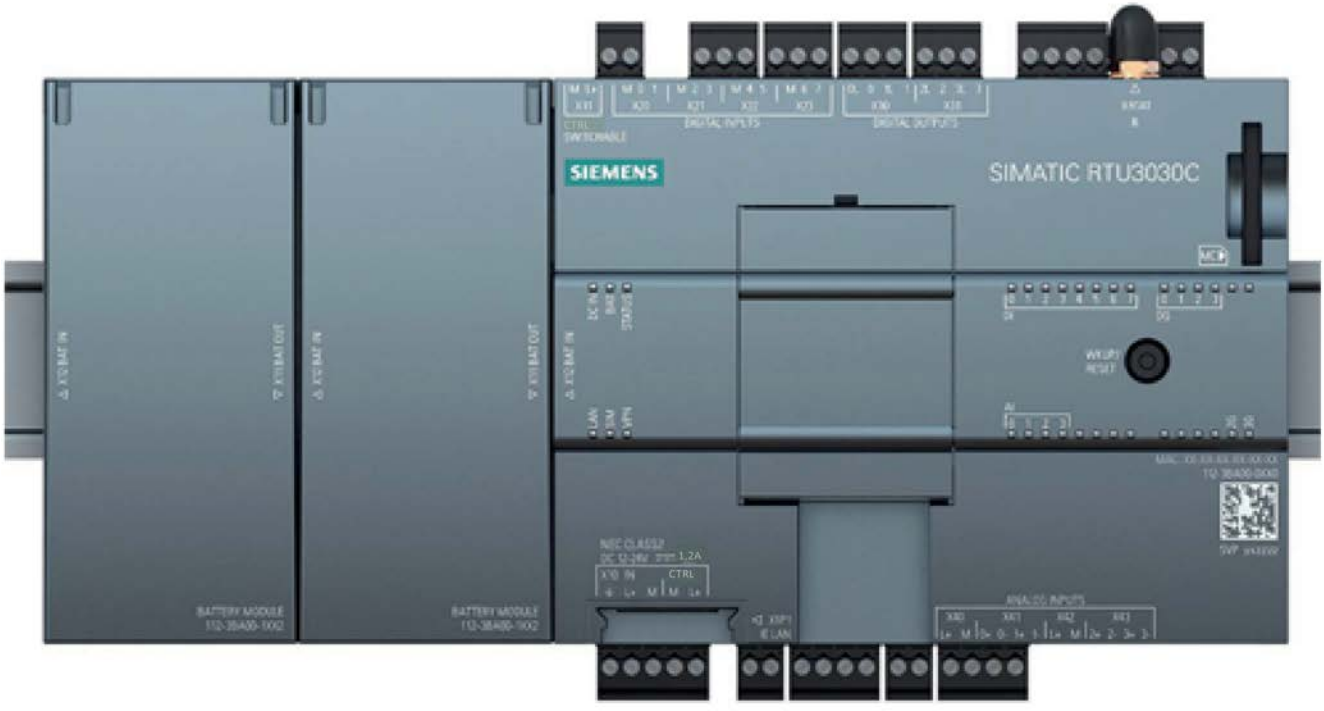

Figure C-1 RTU with two battery modules

C.1.1 Battery module housing

Name	Article number	Explanation
Battery module housing	6NH3112-3BA00-1XX2	Housing of the battery module for power supply to the RTU Suitable design for direct connection to the RTU on the DIN rail with a plug-in connection

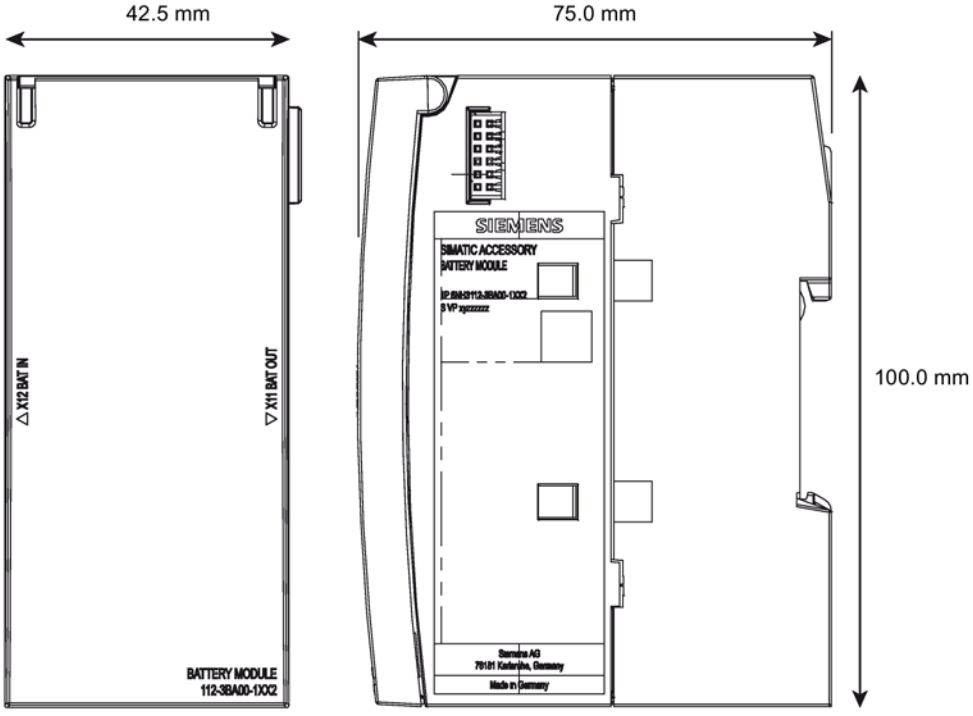

Figure C-2 Battery module housing: Front view (left), side view (right)

Table C- 1 Battery module housing

Technical specifications - battery module housing		
Article number	6NH3112-3BA00-1XX2	
Permitted ambient conditions		
Ambient temperature	During operation with the DIN rail installed horizontally	-40 °C ... +70 °C
	During operation with the DIN rail installed vertically	-40 °C ... +60 °C
	During storage	-40 °C ... +70 °C
	During transportation	-40 °C ... +70 °C
Relative humidity	During operation	≤ 95% at 30 °C, no condensation
	During storage	≤ 95% at 25/55 °C, no condensation
Design, dimensions and weight		
Design	Compact module for DIN rail mounting	

Technical specifications - battery module housing	
Material	Plastic
Degree of protection	IP20
Weight without battery	50 g
Dimensions (W x H x D)	45 x 100 x 75 mm
Installation options	Standard 35 mm DIN rail Can be plugged into the left of the RTU or into a battery module already plugged into the RTU

C.1.2 Battery

Table C- 2 Battery with connecting cable

Technical specifications - battery		
Article number	6NH3112-3BA00-6XX0	
Battery type:	2 D cell, lithium thionyl chloride (LiSOCl)	
Voltage	Nominal	7.8 V
	Voltage range in loaded status	7.62 ... 7.82 V
Capacity (relating to 6 V)	16 Ah	
Max. current pulse for 1 second	3 A	
Max. length of a pulse of 0.5 A (5.6 V)	1000 s	
Permitted ambient conditions		
Ambient temperature	Installed in the battery module housing 6NH3112-3BA00-1XX2 During operation with the DIN rail installed horizontally	-40 °C ... +70 °C
	Installed in the battery module housing 6NH3112-3BA00-1XX2 During operation with the DIN rail installed vertically	-40 °C ... +60 °C
	During storage	-40 °C ... +70 °C
	During transportation	-40 °C ... +70 °C
Relative humidity	During operation	≤ 95% at 30 °C, no condensation
	During storage	≤ 95% at 25/55 °C, no condensation
Dimensions and weight		
Weight	250 g	
Dimensions without connecting cable (W x H x D)	80 x 62 x 37 mm	
Installation options	Installation in the Siemens battery module housing 6NH3112-3BA00-1XX2	

C.2 SD card / SMC

C.2.1 Compatible SD cards

Compatible SD cards

For the "Logging" mode you require an SD card.

The card slot and the RTU are compatible with the following card formats:

- **Standard SD card**

  Format 32 x 24 mm

  Specifications:

  – SD 1.0, 1 GB, FAT32

  – SD 1.1, 2 GB, FAT32

  – SDHC, to 8 GB, FAT32

- **Siemens SIMATIC Memory Card (SMC)**

  For information on the available SMC types, refer to the section Siemens Memory Card (SMC) (Page 224).

You will find more information on using SD cards in the section Scope of delivery, accessories, requirements (Page 25).

Note

Temperature range of the SD card

When using an SD card, make sure that this is suitable for the temperature range in which the RTU is used.

C.2.2 Siemens Memory Card (SMC)

Siemens SIMATIC Memory Card (SMC)

The SMC is available with various capacities. The memory capacity is in the range between 2 MB and 32 GB depending on the type. The RTU supports SMC up to 8 GB memory capacity

Article numbers: 6ES9754-8Lx0x-0AA0

You will find information about the SMCs on the following Internet page of Siemens Industry Online Support:

Link: (https://support.industry.siemens.com/cs/ww/en/ps/13750)

C.3 Antennas and accessories

C.3.1 Antenna ANT896-4ME

The following antenna is available for use in mobile wireless networks and can be installed both indoors and outdoors. The antenna must be ordered separately.

Antenna ANT896-4ME

Figure C-3 Antenna ANT896-4ME

Short name	Order no.	Explanation
ANT896-4ME	6GK5896-4ME00-0AA0	Omnidirectional antenna for LTE networks (4G), GSM networks (2G) and UMTS networks (3G); weatherproof for indoor and outdoor areas, IP68, - 40 °.. + 70 °C, N-Connect female incl. toothed washer and nut.

The antenna must be ordered separately, see antenna accessories.

You will find detailed information in the documentation of the device. You will find this on the Internet on the pages of Siemens Industry Online Support at the following address:

Link: (https://support.industry.siemens.com/cs/ww/en/view/100699507)

C.3.2 Antenna ANT794-4MR

The following antenna is available for use in mobile wireless networks and can be installed both indoors and outdoors. The antenna must be ordered separately.

Antenna ANT794-4MR

Figure C-4 Antenna ANT794-4MR

Short name	Order no.	Explanation
ANT794-4MR	6NH9 860-1AA00	Omnidirectional antenna for LTE networks (4G), GSM networks (2G) and UMTS networks (3G); weatherproof for indoor and outdoor areas; IP65, - 40 °.. + 70 °C, 5 m connecting cable connected permanently to the antenna, SMA connector, including installation bracket, screws, wall plugs.

You will find detailed information in the documentation of the device. You will find this on the Internet on the pages of Siemens Industry Online Support at the following address:

Link: (https://support.industry.siemens.com/cs/ww/en/view/23119005)

C.3.3 Antenna accessories, screw connections

Overview of antennas and accessories

The RTU has an SMA socket as the antenna connector.

Depending on the use of the RTU without or with protective housing, different components must be used.

- **Using the RTU without protective housing**

  Use the antenna ANT794-4MR with SMA plug

- **Using the RTU with protective housing**

  Use the following components:

  – Antenna ANT896-4ME (N-Connect female)

  – HF coupling piece (N-Connect male / N-Connect male)

  – For mounting in the 13.7 x 16.2 mm hole of the protective housing, alternatively:

    Cabinet feedthroughs (N-Connect female/ N-Connect female) or

    Overvoltage protection module LP798-1N (N-Connect female/ N-Connect female), see section Overvoltage protection module for the antenna cable (Page 232).

  – Flexible connecting cable (N-Connect male/ SMA male)

Antenna accessories

- **Cabinet feedthrough**

  To feed the antenna cable through the wall of the protective housing from the outside, you require the following cabinet feedthrough:

  Cabinet feedthrough for wall thickness max. 4.5 mm, IP68

  N-Connect female/ N-Connect female

  Manufacturer: Siemens AG

  Article number 6GK5 798-2PP00-2AA6

  Link: (https://support.industry.siemens.com/cs/ww/en/pv/6GK5798-2PP00-2AA6/td)

- **HF coupling piece**

  For connecting two components:

  N-Connect male / N-Connect male

  Manufacturer: Siemens AG

  Article number 6GK5 798-0CP00-1AA0

  Link: (https://support.industry.siemens.com/cs/ww/en/pv/6GK5798-0CP00-1AA0/td)

- **Flexible connecting cable for antenna**

  Flexible connecting cable, preassembled Length 0.3 m to connect the RTU to the overvoltage protection module or the cabinet feedthrough

  N-Connect male / SMA male

  Manufacturer: Siemens AG

  Article number 6XV 1875-5LE30

  Link: (https://support.industry.siemens.com/cs/ww/en/pv/6XV1875-5LE30/td)

  Other possible lengths:

  – Length 1 m: 6XV 1875-5LH10

    Link: (https://support.industry.siemens.com/cs/ww/en/pv/6XV1875-5LH10/td)

  – Length 2 m: 6XV 1875-5LH20

    Link: (https://support.industry.siemens.com/cs/ww/en/pv/6XV1875-5LH20/td)

  – Length 5 m: 6XV 1875-5LH50

    Link: (https://support.industry.siemens.com/cs/ww/en/pv/6XV1875-5LH50/td)

C.4 Protective housing

C.4.1 Aluminum protective housing

Aluminum protective housing

Name	Article number	Explanation
Aluminum protective housing	6NH3112-3BA00-1XX3	Properties • Material: Aluminum (AlSi 12), powder-coated, gray ((RAL 7001)) • Degree of protection IP68 • Resistant to salt water • Lid with hinges and 4 front screws (stainless steel, PIN-Torx) lid seal chloroprene • With mounted 35 mm DIN rail, suitable for the RTU • 7 holes for cable gland PG 16 • 2 ventilation nozzles (top/bottom) with DAE membrane, watertight, dust proof, permeable for steam • Resistance to impact 10 J (ATEX 7J) • Approval acc. to ATEX (KEMA, IECEx), cULus Supplied accessories: • 2 DIN rail brackets • Documentation Grounding via lightning protector or PG screw connection

Table C- 3 Accessories to be ordered separately

Accessories	Article number
Cable gland PG 16 (10-14 mm), brass nickel plated, IP68 Packaging unit 2	6NH3112-3BA00-1XX4
Sealing plug M 16, brass, IP68 Packaging unit 2	6NH3112-3BA00-1XX5

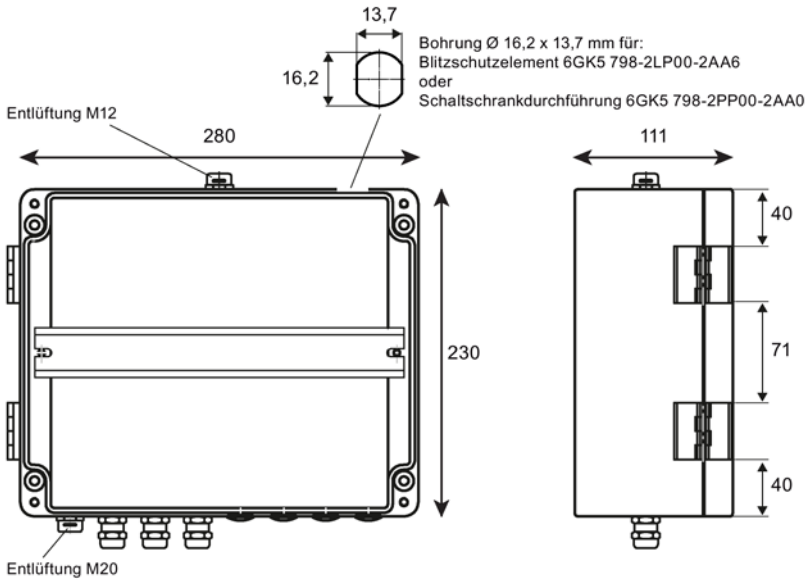

Figure C-5 Aluminum protective housing: Front view (left), side view (right)
Here with several mounted PG screw connections and sealing plugs (do not ship with the product)

Table C- 4 Aluminum protective housing

Technical specifications		
Article number	6NH3112-3BA00-1XX3	
Permitted ambient conditions		
Ambient temperature	During operation	-40 °C ... +80 °C
	During storage	-40 °C ... +80 °C
	During transportation	-40 °C ... +80 °C
Relative humidity	During operation	≤ 95% at 30 °C, no condensation
	During storage	≤ 95% at 25/55 °C, no condensation
Design, dimensions and weight		
Material	Aluminum	
Degree of protection	IP68	
Weight	3395 g	
Dimensions (W x H x D)	280 x 230 x 111 mm	
Installation options	Standard 35 mm DIN rail	

C.4.2 Stainless steel protective housing

Stainless steel protective housing

Name	Article number	Explanation
Stainless steel protective housing	6NH3112-3BA00-1XX1	Properties • Material: Stainless steel 1.4301 • Degree of protection IP68 • Lid with locking option using a padlock • Lid seal silicon • With mounted 35 mm DIN rail, suitable for the RTU • 7 holes for cable gland PG 16 • 2 ventilation nozzles (top/bottom) with DAE membrane, watertight, dust proof, permeable for steam • Resistance to impact 10 J (ATEX 7J) • Approval acc. to ATEX (KEMA, IECEx), cULus • Premounted: Grounding bolts M6, brass Supplied accessories: • 2 DIN rail brackets • Documentation Grounding via grounding bolts or PG screw connection

Table C- 5 Accessories to be ordered separately

Accessories	Article number
Cable gland PG 16 (10-14 mm), brass nickel plated, IP68 Packaging unit 2	6NH3112-3BA00-1XX4
Sealing plug M 16, brass, IP68 Packaging unit 2	6NH3112-3BA00-1XX5

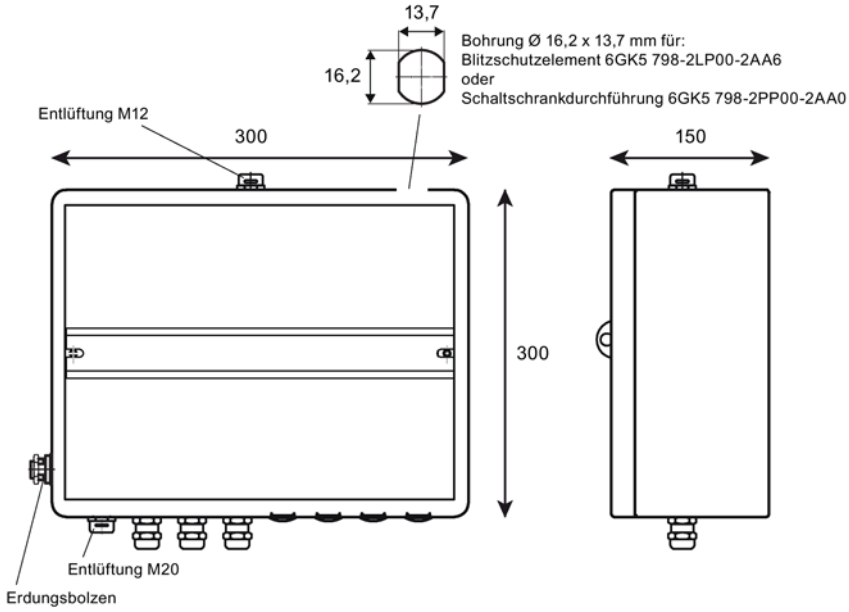

Figure C-6 Stainless steel protective housing Front view (left), side view (right)
Here with several mounted PG screw connections and sealing plugs (do not ship with the product)

Table C- 6 Stainless steel protective housing

Technical specifications		
Article number	6NH3112-3BA00-1XX1	
Permitted ambient conditions		
Ambient temperature	During operation	-60 °C ... +135 °C
	During storage	-60 °C ... +135 °C
	During transportation	-60 °C ... +135 °C
Relative humidity	During operation	≤ 95% at 30 °C, no condensation
	During storage	≤ 95% at 25/55 °C, no condensation
Design, dimensions and weight		
Material	Stainless steel	
Degree of protection	IP68	
Weight	5960 g	
Dimensions (W x H x D)	300 x 300 x 150 mm	
Installation options	Standard 35 mm DIN rail	

C.5 Overvoltage protection modules

C.5.1 Overvoltage protection module for the antenna cable

Overvoltage protection module for the antenna

The following or a technically equivalent module are suitable to protect the system from looping in overvoltages via an antenna cable. Degree of protection IP68

Lightning Protector LP798-1N

Article number 6GK5798-2LP00-2AA6

Manufacturer: Siemens AG

Link: (https://support.industry.siemens.com/cs/ww/en/pv/6GK5798-2LP00-2AA6/td)

C.5.2 Overvoltage protection modules for supply and signal cables

Overvoltage protection modules for supply and signal cables

The following or technically equivalent modules are suitable to protect the system from looping in overvoltages via supply or signal cables:

Manufacturer: DEHN + SÖHNE GmbH + Co. KG

http://dehn.de

- For power supply cables

  Blitzductor BVT AVD 24,

  Article number 918 422

Documentation references

D

Where to find Siemens documentation

- Article numbers

  You will find the article numbers for the Siemens products of relevance here in the following catalogs:

  – SIMATIC NET - Industrial Communication / Industrial Identification, catalog IK PI

  – SIMATIC - Products for Totally Integrated Automation and Micro Automation, catalog ST 70

  You can request the catalogs and additional information from your Siemens representative. You will also find the product information in the Siemens Industry Mall at the following address:

  Link: (https://mall.industry.siemens.com)

- Manuals on the Internet

  You will find SIMATIC NET manuals on the Internet pages of Siemens Industry Online Support:

  Link: (https://support.industry.siemens.com/cs/ww/en/ps/15247/man)

  Go to the required product in the product tree and make the following settings:

  Entry type “Manuals”

- Manuals on the data medium

  You will find manuals of SIMATIC NET products on the data medium that ships with many of the SIMATIC NET products.

/1/

SIMATIC
RTU3030C
Operating instructions
Siemens AG
Link: (https://support.industry.siemens.com/cs/ww/en/view/109479322)

/2/

SIMATIC
RTU3030C
DNP3 Device Profile
Siemens AG
Link: (https://support.industry.siemens.com/cs/ww/en/ps/15920)

/3/

SIMATIC
RTU3030C
Interoperability list IEC 60870-5-104
Siemens AG
Link: (https://support.industry.siemens.com/cs/ww/en/ps/15920)

/4/

SIMATIC NET
TeleControl Server Basic (Version V3)
Operating Instructions
Siemens AG
Link: (https://support.industry.siemens.com/cs/ww/en/ps/15918/man)

/5/

SIMATIC NET
SINEMA Remote Connect - Server
Operating Instructions
Siemens AG
Link: (https://support.industry.siemens.com/cs/ww/en/ps/15915/man)

/6/

SIMATIC NET
SINEMA Remote Connect - Client
Operating Instructions
Siemens AG
Link: (https://support.industry.siemens.com/cs/ww/en/ps/15915/man)

/7/

SIMATIC NET
SINEMA Remote Connect
Getting Started
Siemens AG
Link: (https://support.industry.siemens.com/cs/ww/en/ps/15915/man)

/8/

SIMATIC NET
TIM DNP3
System manual
Siemens AG
Link: (https://support.industry.siemens.com/cs/ww/en/ps/15940/man)

/8/

Index

A

Abbreviations/acronyms, 4
Active - parameter, 120
Antenna position, 60
Article number, 3
Authorized phone number, 107

C

Changing the battery, 116
Configuration PC - Web browser, 25
Connection establishment, 14
Connection establishment delay, 141
Cross references (PDF), 4

D

Data buffering, 24
Diagnostics messages, 83
DNP3
    Device profile, 17
    Protocol, 17

E

E-mail, number of texts, 24
En - block parameter, 158
Encryption, 20

F

File names, 78
Files - formats, 78
Firmware
    Download, 18
    Variants, 17
    Version, 3

G

Glossary, 6
Grounding, 52

H

Hardware product version, 3

I

IEC 60870-5
    Device profile, 17
    Protocol, 17
IMEI, 3
Inverting (block parameters), 158
IP configuration, 22

L

LAN interface, activating, 13
Lightning protection, 52
Logging, 90
Logging - parameters, 120

M

MAC address, 3
Memory (messages), 24
Memory space, 77

N

Name - parameter, 120

O

Online Support - Firmware, 18
OPC client, 11
OPC server, 11
Open Source software license conditions, 62
OpenVPN
    Server, 21
    Version, 20
Operating modes, 110
Overvoltage protection, 52

P

Password Incorrect entry, 105

S

Safety notices, 43
Send buffer, 24
Service & Support, 5
SIM card
  inserting/removing, 47
  Unlocking, 96
SIMATIC NET glossary, 6
SMS messages, number of texts, 24
STARTTLS, 20
Startup behavior (RTU), 60
Status ID - data points, 152

T

TCSB, 11
TeleControl Basic, 17
Telecontrol connection, 23
Telecontrol server, 11
Time stamp, 82
Time stamp (messages), 24
Time-of-day synchronization, 23
Training, 5

U

User name Incorrect entry, 105
UTC, 82

W

Wake-up call, 154
Wake-up call allowed, 154
Wake-up SMS, 154
WBM, 12, 61
Web Based Management, 61
Web browser, 25
Wireless approvals, 217